CHAPTER - 1

INTRODUCTION AND SURVEY

INTRODUCTION AND SURVEY

1.1. INTRODUCTION :-

Filter can be considered as frequency selective network. A 'Filter' is required to seperate an unwanted signal from a mixture of unwanted and wanted signals.Electronic filters are ubiquitous and it is difficult to conceive a modern electronic device of a system which does not employ an electric filter. For our purpose a 'filter' will be defined as,

i) Any circuit that produced a prescribed frequency response charecteristics of which, the most common objective is to pass certain frequency while rejecting others.

ii) Filter is a network used to shape the frequency spectrum of an electrical signal.

Much research and development has been done in the areas of filter theory design and implementation because of the importance of the 'filter'many books(124-130)and thousands of articles have been written on the subject.

1.2. SURVEY OF LITURATURE :-

The pioneering work done by SALLEN and KEY (1) and other workers(2-6)on the synthesis of the second order networks using the transistors as the active elemnents marks the begining of the new era in the field of the "active filter".

As the integrated circuit operational amplifiers which were both compact and economical,came into market, a number of new

active building blocks and their synthesis techniques were proposed by many authors. Active filters employing R-C networks in conjuction with active elements such as NICs[7-10] controlled voltage sources[11], Gyrators and F.D.N.R.[16,17] were proposed by different networks, where as the limitations of the network synthesis using NIC were considered by a few [18-20].

Since then, a number of review articles [21-22] and books [23-26] have been extensively written on active filters.

The need of obtaining fully integrated active filters that are compatible with MOS technology gave rise to switched capacitor(Sc) active filters. Although, the idea of using switched capacitors and the associated theory was developed as early as 1960's[27], it was the decade of 1970s that saw emergence of the SC filters as a very promissing method of implementing precision monolithic analog filters in MOS ntegrated circuits[28-30].

The concept of current conveying was introduced by SMITH and SEDRA[31] (1968). It has been shown by ARONHIME[32], SENANI[33] and other workers that the current conveyers may be used to implement nearly all transfer functions with a high input impedance and independently controllable voltage gain. since then, many workers[34,35] have designed the active filters by using the current conveyers.

With the easy availablity of the computers the design and analysis of active filters assumed a new dimension, presently, a number of computer modelling packages are available for the analysis of the active filters[36], such as DIANA , DINAP, SPICE , ISCAP, SCAR, TCAP ETC. Kno[37] et al, and other workers [38-39] have

used these computer programs in the analysis of the SC filters.

M.A.SODERSTRAND [99] and K.L.LEE[40] are the pioneers in the computer aided design and the analysis of active `R' Filters.

In the recent years an important concept has dominated the active filter research. This is the development of `active R'filters , which make use of parasitic capacitances in the active devices to build the filters without the use of inductors and capacitors at the frequencies higher than possible with active R-C filters.

M.A.SODERSTRAND [44](1972),RADHAKRISHNARAO AND SRINIWASAN [44-47](1973-1976) are the pioneers in the use of operational amplifier pole . They suggested that the pole of an operational amplifier could be used to design an active filters with only one capacitor. MITRA AND AATRE[48](1976),HO AND CHIU[49](1976),SOLIMAN AND FAWZY[50](1977) and ANANDA MOHAN [51](1979) have realized the active filters using the operational amplifier pole,while NANDI(1976-78) has contributed towards the realization of the grounded capacitors using operational amplifier pole.

Subsequently, many workers have contributed to the active R filters.SCHAUMANN[54,55](1975-76) has suggested a general second order filter circuit which use only resistors and operational amplifiers. SODERSTRAND[56,57](1976) has suggested a simplified version of this circuit ,which realized all of the band pass, high pass and lowpass responses simultaneously at the three different nodes. BAND and SCHAUMANN[58-61](1975-78) have proposed the design methods for the monolithic analog active `R' filters.

VENKATESHWARAN[62](1978) and SOWRIRAJAN ((1979) provided an active `R' filter with a driving point admittance simulation R.S.SHARMA AND U.K.DULLU [64-65](1981) have proposed an active `R' filter that gives a second order band pass and lowpass response simultaneously at two different points,but failed to realize the high pass output H.K.KIM and O.B.RA[66,67](1978and 79) have suggested an active `R'network that realizes all the LP,HP BP All pass and notch responoes when the element values are suitably adjusted for each response. The price that is paid to get all the responses in same configuration is the larger number of passive elements used in the network.

MITRA AND A.K.AATRE[68](1976) have discussed the low sensitivity and high frequency active R filters. SOLIMAN AND FAWZY [69](1978) have suggested a universal active `R' biquad realizing a general biquadretic, band pass and low pass charecteristics.when the network is adjusted to realize a high pass characteristic, it becomes a specific case of SCHAUMANN'S active `R' filter. M.T. AHMED,M.A. SIDDIQUUI[1978-79]and M.T.JAVED [72](1983) have proposed active `R' biquads that realize all important types of second order filter fuctions.A general second order active `R' network, has been presented by J.C.M. BERNUDEZ (1981) and L.P.COLOBA[74](1983) by which two different active R biquads can be realized as the special cases. R NANDI et al (1984) proposed an active `R' multifunction biquad that realizes the band pass,Low pass,notch,all pass and oscillator functions. SUN- ZHI-XIAO[76,77](1980-83) has presented

an active `R' biquad with four output terminals realizing LP,BP, HP, notch and all pass functions realizing at least two functions at each out put terminal. A voltage tunable active `R'filter has been designed by NEWCOMB and S.T.LIEN[78](1984) with the differential voltage controlled current source (DVCCS) as the basic building block. E.A.TALKHAN,M.N.IBRAHIM and A.S.NOUH[79]have designed an integratable tunable active `R' band pass filter. KAPUSTIAN,BHATTACHARYA and SWAMY[81,82](1978&79) have discussed the frequency limitations of active `R 'filters OSOWSKI[83](1979) has realized the voltage transfer function using active R network following the flowgraph technique,whereas the active `R' multifuction circuit synthesis has been worked out by VENKATARAMANI and VENKATESHWARAN[84](1982).

Although the passive RLC filters have been disregarded owing to their large size and cost,they are still prefered for thier high stability. Many workers have succeeded in simulating the inductor and capacitor in designing active `R'filter counter-parts of the passive filters.[85-96]

A fourth order active `R' ladder has been designed by SODERSTRAND[97,98,99](1975-78) by using the simulated inductors and capacitors-SODERSTRAND[100](1978) has also suggested an active `R' filter using CMOS transistors.

. MASARU ISHIDA,YUTEKA FUKAI and KEISUKE,EBISUTANI[102] (1984) have suggested an active `R' synthesis of a driving point impedance,based on the single pole roll off characteristics of the operationalamplifier,which simulates inductance,capacitance, F.D.N.R and R.D.N.C..Itis experimentally shown that the inductor

simulation presentsa reliable high frequency performance.

The active `R' concept find its application not only in the active `R' filters but also in the several electronic circuits, resulting in an easy monolithic IC Implementation. In order to achieve the major objectives of ICdesign,theelimination of external capacitor is imperative and the values of the resistors have to be within the specified ranges,which are achieved by the active `R'concept in the high frequency region.

Active `R' versions of oscillators have been considered by ABUELMAATT and ALMANSOURY (1986)[104-108]and many others[109-112] Active realization of RL impedances and resonators [115-116]have also been considered by a few investigators.

MC GINTI (1987)[117]has suggested a design method for the monolithic implementation of a class of active `R' filters,which provides an alternative to the high speed digital filters. SHAH and TANTARY[103](1987) have succeeded in designing an active R version of a voltage controlled oscillator which utilizes the single pole characteristics of the operational amplifiers. N.MOHAN and R.L.PATIL[101](1989) have designed a second order low pass active `R' filter , which simulates the inductor and capacitor with the synthesis techniques directly derivable from the passive synthesis techniques.

Recent trend is to make use of computers in designing of various filters HORWARD HUTCHING[119](1990) described the design process for several types of filters by interfacing with computer. Zero-error low pass filter by MAXIM[120](1990) provides accurate

cut-off frequency setting and eliminates DC offset errors completely.

J.V.VOSPER[121](1991) described synthesis of first order active R allpass networks and their applications in sinusoidal oscillator design, which makes the design useful for electronic variation of frequency. Ripple pass functions and their active R realization is considered by N.MOHAN and R.L.PATIL[122](1992).

Now-a-days,plug-in card filters are available with LAPLACE instruments[123](1992) these are PC based filter cards.

1.3 CLASSIFICATION

Filters may be classified in a number of ways like

(1) Analog or digital

(2) Passive or Active

(3) Audio (AF) or Radio frequency (RF)

"Analog" filters are designed to process "Analog" signals, While, "digital" filters process analog signals using digital techniques.

Depending on the type of elements used in their construction,filters may be classified as "Passive" or "active".

PASSIVE FILTERS :-

These are the networks containing passive components only such as resistors,capacitors and inductors only. On the other hand, active filters employ active devices along with the passive components.

Filters are classified according to the Job they perform, most comonly used filters are as listed below.

a) Low- pass filter.

b) High-pass filter

c) Band-pass filter.

d) Band-reject filter.

e) All-pass filter

1.3.(a) <u>LOW PASS RC FILTER (Passive):-</u>

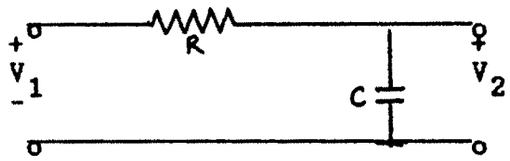

[Fig.1.1 (a) Low pass filter]

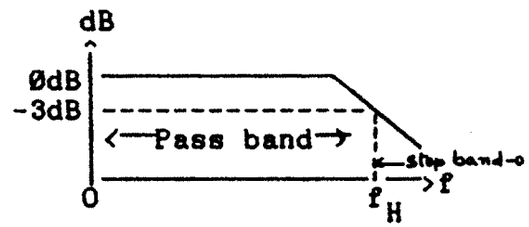

[Fig.1.1(b) Characteristics]

Transfer function :-

$$V_o/V_{in} = \frac{1}{1+j(f/f_H)} \quad \text{or} \quad \frac{V_2(s)}{V_1(s)} = \frac{1/RC}{s+1/RC} = \frac{\omega_o}{S+\omega_o}$$

where magnitude $\omega_o = \frac{1}{RC}$

$$|V_o/V_{in}| = \frac{1}{(1+(f/fH)^2)^{1/2}} \quad \ldots\ldots\ldots\ldots\ldots\ldots (1.1)$$

1.3.(b) <u>High-Pass RC Filter</u> :-

This circuit is formed by simply interchanging the frequency determining resistors and capacitors in low-pass filter as shown in fig.1.2(a).

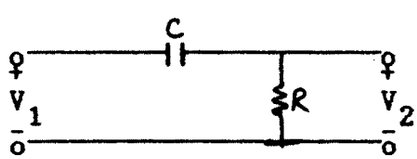

[Fig.1.2(a) HP `RC' Filter]

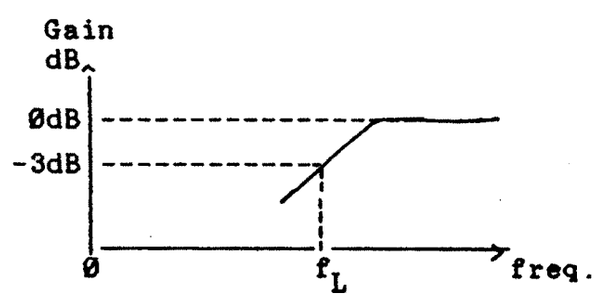

[Fig.1.2(b) characteristics]

Transfer function :

$$\frac{V_o}{V_{in}} = \frac{j(f/f_L)}{1+j(f/f_L)} \quad \text{or} \quad \frac{V_2(s)}{V_1(s)} = \frac{s}{s+1/RC} = \frac{s}{s+\omega_o}$$

magnitude

$$\left| \frac{V_o}{V_{in}} \right| = \frac{(f/f_L)}{\left(1+(f/f_L)^2\right)^{1/2}} \quad \ldots\ldots\ldots\ldots\ldots\ldots\ldots (1.2)$$

<u>1.3(c) Band-pass filter</u> :-

It has the property that one band of frequencies (the pass band) is transmitted, while two bands of frequencies, namely, those below and above pass band are blocked (the stop bands). Ideal and Practical characteristics for Band pass filter are as shown in fig.1.3(a) and fig.1.3(b) respectively.

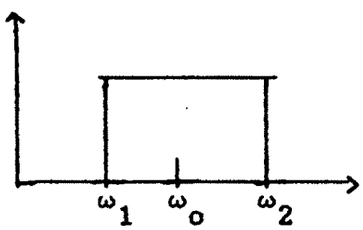

fig.1.3(a)

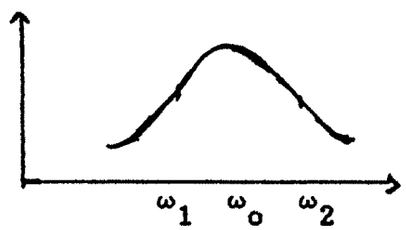

fig. 1.3(b)

The range of frequencies that is passed is called the Band width (BW) and is defined as the difference between the frequencies that define the edge of the passband using ω_1 and ω_2 as shown in fig.(1.3) to define the band pass edges we obtain

$$BW = \omega_2 - \omega_1 \quad (1.3)$$

The center frequency ω_o of the pass band is defined as the geometric mean of the band edge frequencies . Thus

$$\omega_o = (\omega_1 \omega_2)^{1/2} \quad (1.4)$$

Fig.1.3(a) shows an ideal (non realizable) band pass characteristic and fig.1.3(b) shows a characteristic that is monotonic in the sense that on either side of the center frequency ω_o, the derivative of its magnitude characteristic does not change sign.

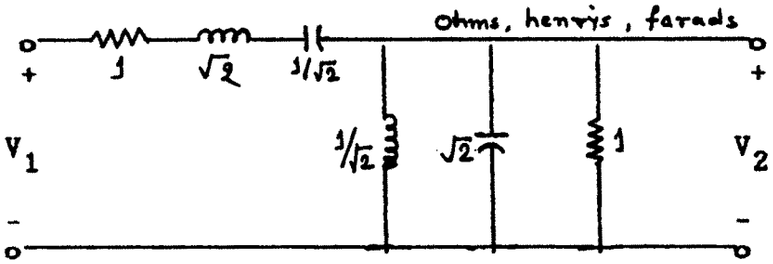

[fig.1.3(c) A band pass filter]

1.3(d) <u>Band rejection filters</u> :-

Band rejection filter is also called a band elimination filter or a notch filter. It has a property that one band of frequencies (the stop band) is blocked ,while two bands of frequencies , namely ,those below and above the stop band ,are passed (the pass bands) ,ideal and practical characteristics for band rejection filters are shown in fig.1.4(a) and 1.4(b) respectively.

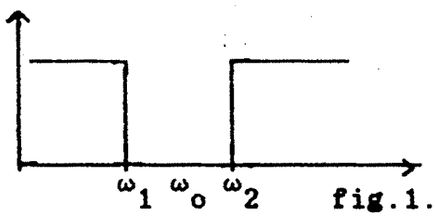

fig.1.4(a)

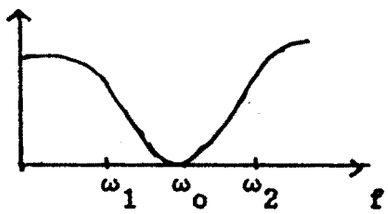

fig.1.4(b)

The range of frequencies that is blocked is called the band width (BW) and is defined as the difference between the frequencies that define the edges of the stop band. Using ω_1 and ω_2 as shown in figs. to define the stop band edges ,we obtain

$$BW = \omega_2 - \omega_1 \quad (1.5)$$

The center frequency ω_o of the stop band is defined as the geometric mean of the band edge frequencies. Thus

$$\omega_o = (\omega_1 \omega_2)^{1/2} \quad (1.6)$$

Fig.1.4(a) shows an ideal (not realizable) band reject characteristic and fig.1.4(b) shows a monotonic characteristic.

"RLC" Passive filters were the major types used for many years, and such filter technology still represents the dominent form above the audio frequency range. Passive RLC structures are capable of achieving relatively good filter characteristics in applications ranging from the audio frequency range to the upper limit to the lumped parameter range. But the drawbacks with such passive RLC circuits are as follows.

1) Poor response at lower end of audio frequency ranges :-
As frequency decreases inductance value increases. So at very low frequency range large value inductance is needed and which creates problem of heavy internal losses which, in turn, degrade significantly the quality factor (Q) for each coil and associated filter response have deviations from their desired form.

2) The actual physical sizes of large value inductor (or bulkiness) and the high cost of such inductors.

3) Difficult to match the cascading stages.

4) Attenuation outside the desired band increases slowly.

5) Gain is less than unity etc.

1.4 ACTIVE FILTERS :-

"Active filters" are theoretically capable of achieving

the same responses as passive RLC filters with the following advantages.

1) Gain and frequency adjustment flexibility :-

Since the operational amplifier is capable of providing a gain , the input signal is not attenuated as it is in a passive filter. In addition , the active filter is easier to tune or adjust.

2) Active filters can have voltage gain,as much as 40 dB in low frequency , low "Q" filters.

3) The primary advantage of an active filter is its small size and weight for low frequency applications and its ruggedness.

4) No loading problem :-

Because of the high input resistance and low output resistance of the operational amplifier the active filter does not cause loading of the source or load.

5) COST :-

Typically, active filters are more economical than passive filters. This is because of the variety of cheaper operational amplifiers and the absence of inductors.

1.4(a) <u>First-Order low-pass active RC filter</u> :-

Transfer function :

$$\frac{V_o}{V_{in}} = \frac{A_f}{1+j(f/f_H)} \qquad (1.7)$$

Where, V_o/V_{in} is the gain of the filter as a function of frequency.

$A_f=1+R_1/R_f$ is the pass band gain of the filter

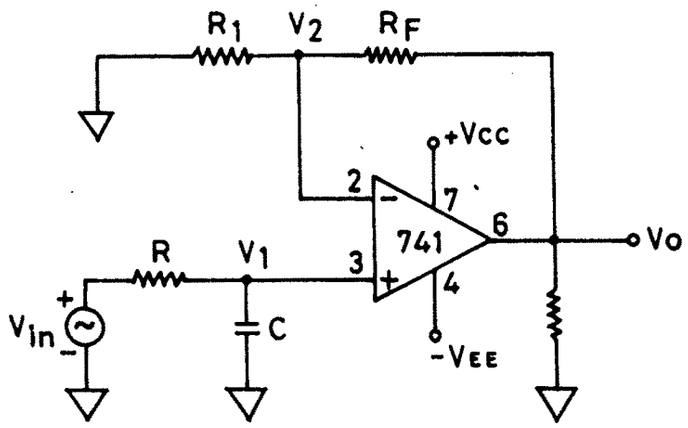

Fig. 1·5(a) – First-order low pass Butterworth filter circuit.

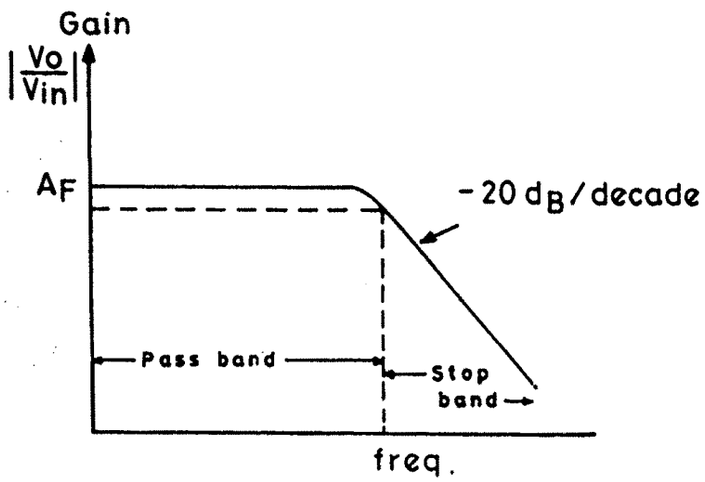

Fig. 1·5 (b) – Frequency response.

f is the frequency of the input signal

$f_H = 1/2\pi RC$,high cutoff frequency of the filter

The gain magnitude and phase angle equations of the LPF can be obtained by converting eqation (1.7) in to its equivalent polar form as follows.

$$|V_o/V_{in}| = \frac{A_f}{\left[1+(f/f_H)^2\right]^{1/2}}$$

$$\phi = -\tan^{-1}(f/f_H)$$

Where ϕ is phase angle in degrees.

The operation of the LPF can be varified from the gain magnitude equations.

1) At very low frequencies , i.e. $f < f_H$

$$|V_o/V_{in}| \approx A_f$$

2) At $f=f_H$,

$$|V_o/V_{in}| = A_f/\sqrt{2}$$

3) At $f > f_H$, $|V_o/V_{in}| < A_f$

It is seen that the gain decreases by 20dB ($=20\log_{10}$) each time the frequency increased by 10 in stop band. (i.e. 20dB/decade roll-off).

1.4(b) <u>High pass active 'RC' filter</u> :-

HPFs are often formed simply by interchanging frequency-determining resistors & capacitors in LPF.as shown in fig. 1.5 (a).

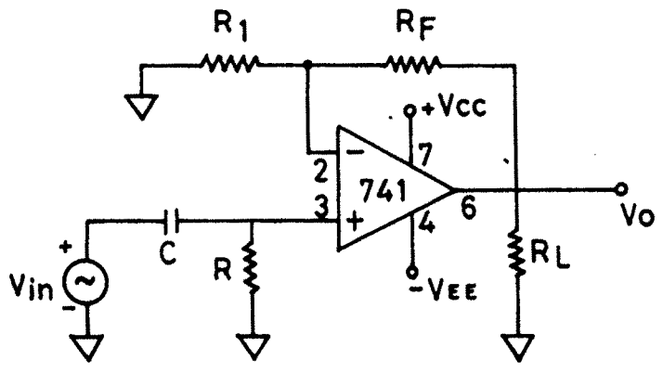

Fig. 1·6(a) – First order HP Butterworth filter circuit.

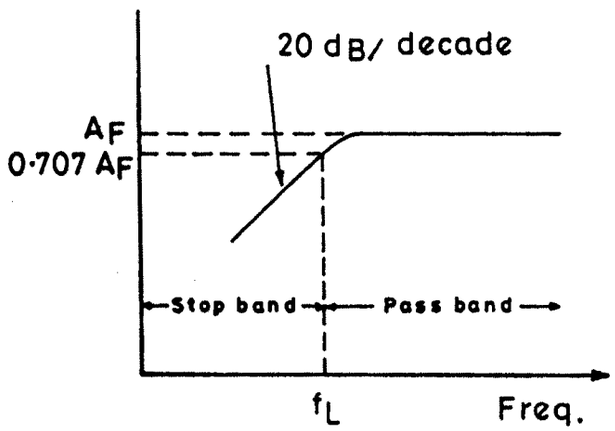

Fig. 1·6 (b) – Frequency response.

Transfer function :

$$\left|\frac{V_o}{V_{in}}\right| = \frac{A_F\,(f/f_L)}{\sqrt{1+(f/f_L)^2}}$$

$$|H(j\omega)| = G(\omega) = \left\{ \frac{H_o^2\,\omega^2}{\omega^2 + \omega_o^2} \right\}^{1/2}$$

1.4(c) <u>First order Band pass Active RC filter</u> :-

Basically , there are two types of B.P.F.s

(1) Wide Band pass and

(2) Narrow Band pass.

Unfortunately there is no set dividing line between the two. But the filter is considered as wide band pass if its "Figure of merit" or "Quality factor" Q <10.

On the other hand , if Q >10 , we will call the filter a narrow band pass filter . Thus, Q is a measure of selectivity , meaning the higher the value of Q ,the more selective is the filter or the narrower its band width. The relation between Q, the 3dB BW and the center frequency f_c is given by

$$Q = \frac{f_c}{BW} = \frac{f_c}{f_H - f_L}$$

<u>Wide Band pass filter</u> :-

A wide band pass filter can be found by simply cascading HP and LP sections and generally the choice for simplicity of design and performance.

For wide band pass filter the center frequency f_c can be

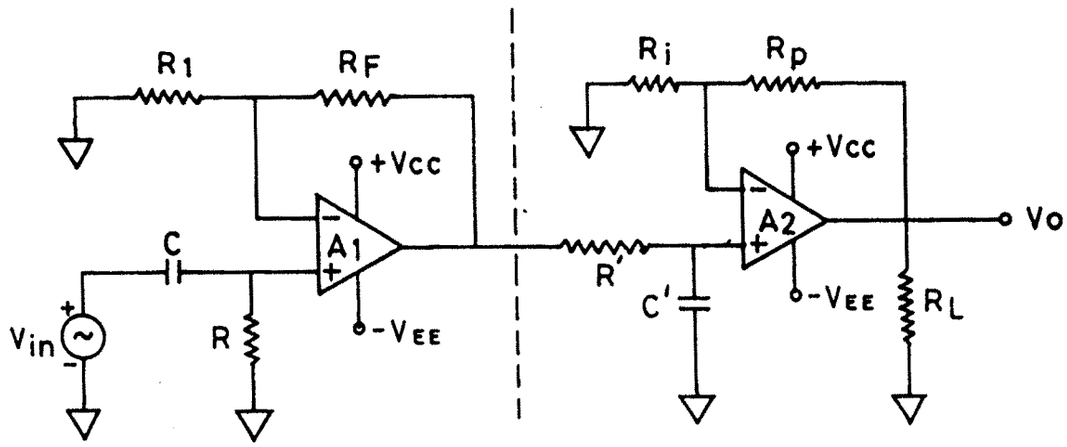

Fig. 1·7 (a) — Wide band pass filter circuit .

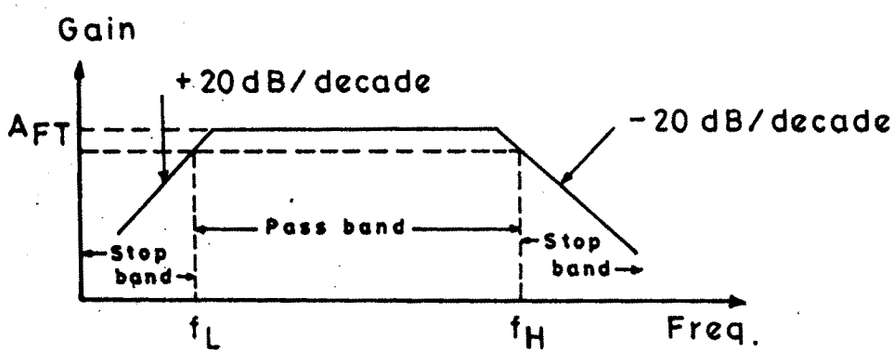

Fig. 1·7 (b)

defined as

$$f_c = (f_H f_L)^{1/2}$$

Transfer function (the voltage gain magnitude) of the band pass filter is equal to the product of the voltage gain magnitudes (Transfer functions) of HP and LP filters.

Transfer function :-

$$\left| \frac{V_o}{V_{in}} \right| = \frac{A_F(f/f_L)}{\sqrt{[1+(f/f_L)^2][1+(f/f_H)^2]}}$$

$$H(j\omega) = G(\omega) = \left[\frac{H_o^2}{1+Q^2(\omega/\omega_o - \omega_o/\omega)^2}\right]^{1/2}$$

$$= \left[\frac{H_o^2\alpha^2\omega_o^2\omega^2}{\omega^4+\omega^2\omega_o^2(\alpha^2-2)+\omega_o^4}\right]^{1/2}$$

where

$$Q = \frac{\omega_o}{\omega_2 - \omega_1} = \frac{f_o}{f_2 - f_1} \quad \& \ \alpha = \frac{1}{Q}$$

1.4(d) <u>Band rejection filters</u> :-

Like band pass filters BRFs can also be classified as 1) Wide Band rejection 2) Narrow Band rejection.

<u>Wide Band rejection filter</u> :- Wide Band Rejection filter often constructed using LPF ,HPF and a summing amplifier.

To realize band rejection response a low cut off frequency f_L of the HPF must be greater than the high cut off frequency f_H of the LPF.In addition ,the pass band gain of both the HP and LP sections must be equal.

<u>Narrow Band rejection filter</u>:-

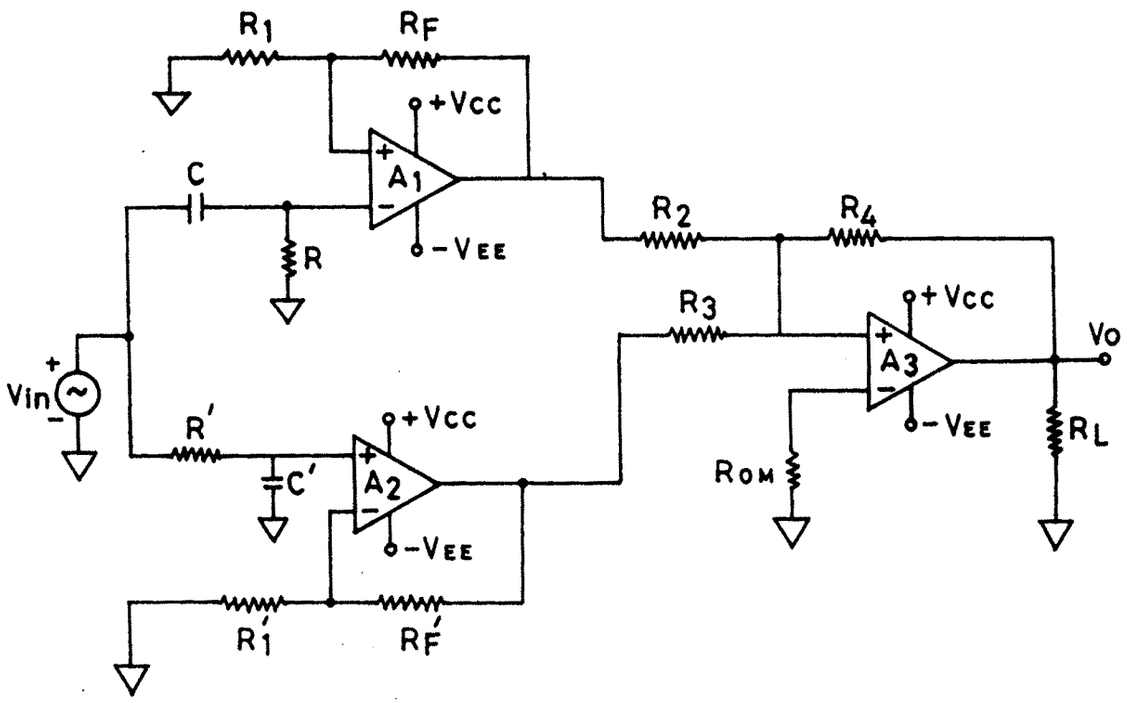

Fig. 1·8 (a) — Wide band rejection filter circuit.

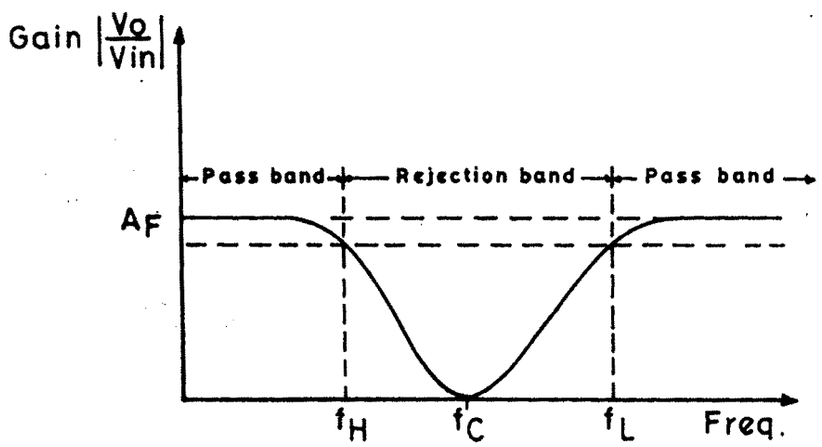

Fig. 1·8 (b) — Frequency response

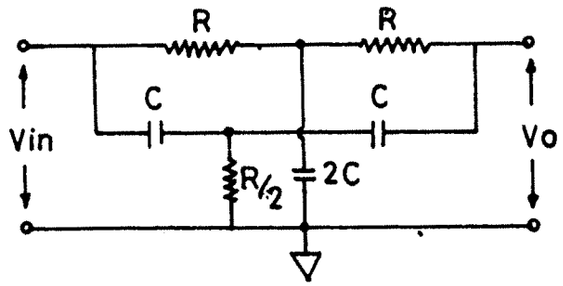

Fig. 1·9 (a) – Twin-T notch filter.

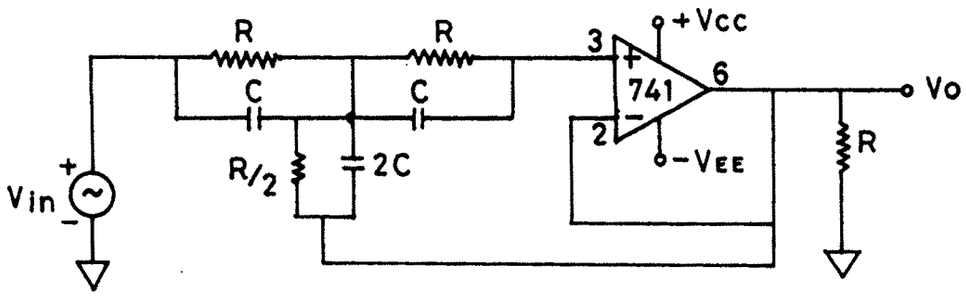

Fig. 1·9 (b) – Active notch filter.

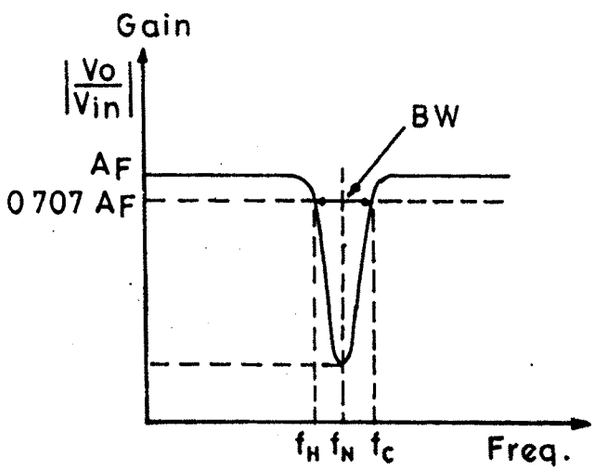

Fig. 1·9 (C) – Frequency response of the active notch filter.

The narrow band reject filter is commonly called the "Notch filter". Because of its higher Q (>10) ,the BW of the narrow band reject filter is much smaller than that of the wide band reject filter.Notch filter is commonly used for the rejection of a single frequency such as 50 or 60 Hz power line frequency hum.The most commonly used notch filter is the twin T- network as shown in fig.1.8 (a).

This is a passive filter composed of two T shaped networks. One T netweork is made up of two resistors and a capacitor ,while the other uses two capacitors and a resistor.

The "Notch out" frequency is the frequency at which maximum attenuation occurs : it is given by

$$f_N = \frac{1}{2\Pi RC}$$

Unfortunately, the passive twin - T network has a relatively low figure of merit Q.However, the Q of the network can be increased significantly if it is used with the voltage follower as shown in fig.

Here,the output of the voltage follower is fed back to the junction of R/2 and 2C . The frequency response of the active notch filter of fig.1.8(a) is shown in fig.1.8(b).

The most common use of notch filter is in communicatior and biomedical instruments for eliminating undesired frequencies.

1.4 (e) <u>All pass filters</u> :-

As the name suggests, an all pass filter passes all

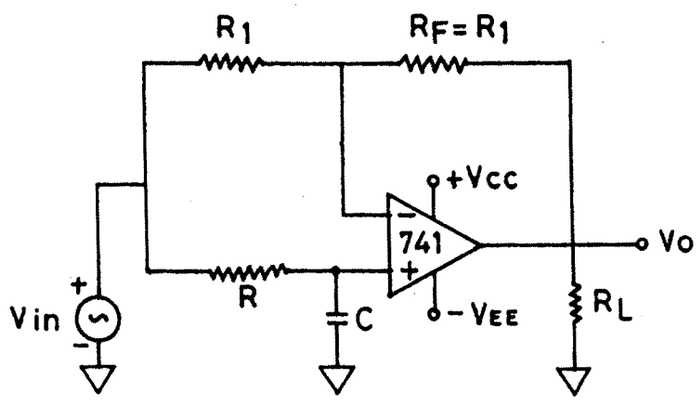

Fig. 1·10 (a) - All-pass filter circuit

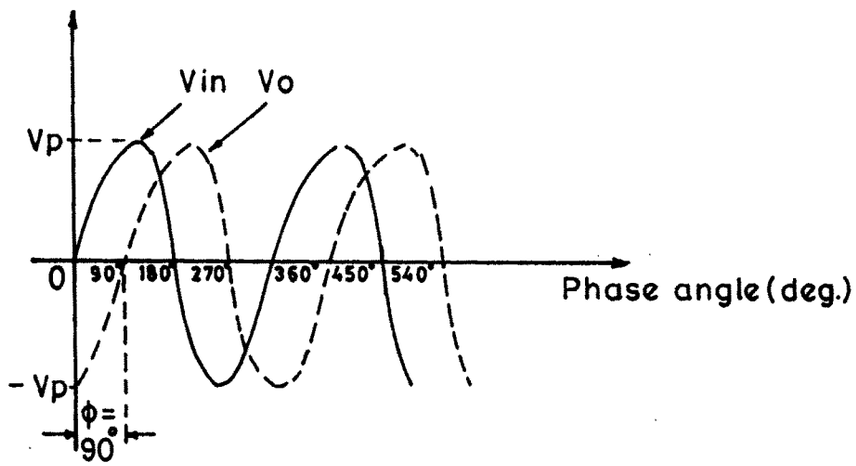

Fig. 1·10 (b) - Phese shift bet input & output voltages.

frequency components of the input signal without attenuation , while providing predictable phase shifts for different frequencies of the input signal. The all pass filters are also called as "Delay-equalizers" or "Phase correctors".

Fig.1.9(a) shows an all pass filter where in $R_f = R_1$. The output voltage V_o of the filter can be obtained by using superposition theorem .

$$V_o = -V_{in} + \frac{-j X_c}{R - j X_c} V_{in} \quad \ldots\ldots\ldots\ldots\ldots\ldots \quad \ldots\ldots(1.8)$$

But $-j = 1/j$ and $X_c = 1/2\Pi fc$.There fore, substituting for X_c and simplifying, we get

$$V_o = V_{in} \left(-1 + \frac{2}{j2\Pi fRC + 1}\right)$$

$$\frac{V_o}{V_{in}} = \frac{1 - j\ 2\Pi fRC}{1 + j\ 2\Pi fRC} \quad \ldots\ldots\ldots\ldots\ldots\ldots\ldots\ldots\ldots\ldots(1.9)$$

Where f is the frequency of the input signal in Hz.

Equation Indicates the amplitude of V_o/V_{in} is unity.That is $|V_o| = |V_{in}|$ through out the useful frequency range and the phase shift between V_o and V_{in} is a function of input frequency f. the phase angle Φ is given by

$$\phi = -2 \tan^{-1}(2\Pi fRC) \quad \text{----------} \quad (1.10)$$

where ϕ is in degrees , f is in hertz , R in ohms and C in farads.

Equation (1.10) is used to find the phase angle ϕ if f ,R and C are known Fig.1.9(b) shows a phase shift of 90^obetween the input V_{in} and out put V_o That is $V_o$lags behind by 90°. For fixed values of R and C , the phase angle ϕ changes from 0 to -180^oas the

frequency f is varied from Ø to infinity. In fig.1.9(c) if the positions of R and C are interchange , the phase shift between input and output becomes positive. That is ,output V_o leads input V_{in} .

With the advent of IC technology,a number of manufacturers have produced a ready-to-use "Universal filters" having simultaneous LP , HP and BP output responses.Notch and all pass functions are also available by combining these output responses in the operational amplifiers.