CHAPTER-II

BARR. BALASAHEB KHARDEKAR LIBRARY
SHIVAJI UNIVERSITY KOLHAPUR

CHAPTER - II

DESIGNS, FABRICATIONS, AND EXPERIMENTAL TECHNIQUES

2.1 Introduction 19

2.2 Chemical Deposition System 19

2.3 Preparation of Sb_2S_3 Thin Films 23

2.4 Techniques of Thin Film Characterisations 24

2.4.1 Thickness measurement 24

2.4.2 Microscopic and x-ray diffraction studies 25

2.4.3 Design of conductivity measuring unit and measurement of conductivity 25

2.4.4 Design of thermoelectric power unit and measurement of thermoelectric power (TEP) 28

2.4.5 Optical absorption measurements 30

2.5 Techniques of Photoelectrochemical(PEC) Characterisations 31

2.5.1 Design and fabrication of a photoelectrochemical cell 31

2.5.2 Measurements on photoelectrochemical (PEC) cell 31

a) Nature of contact between Sb_2S_3 and substrate

b) Electrical and optical characterisation of a photoelectrochemical cell

2.1 Introduction

The relevant theoretical background and detailed mechanism involved in both the thin films and photoelectrochemical cells are described in the respective chapters. As the recent progress in thin film formation by employing various deposition techniques has brought us closer to understand the microscopic basis of the surface science through electrochemical route, this chapter is fully devoted to the necessary designs, fabrications, and experimental techniques used for the preparation and characterisation of the semiconducting material. The details of fabrications and development of a chemical deposition system are described in section 2.2. The section 2.3 presents procedure and technical details for the preparation of Sb_2S_3 thin films. Before using the films in photoelectrochemical cell, it is necessary to characterise them in terms of their electrical and optical properties. The techniques for electrical and optical characterisations such as measurements on conductivity, thermoelectric power, optical absorption, band gap etc are discussed in section 2.4. In section 2.5, fabrication of a PEC cell and essential experimental arrangements for the electical and optical properties of a photoelectrochemical cell are outlined.

2.2 Chemical Deposition System

In this section, an usual chemical deposition method reported elsewhere |37| has been modified & attempts have been made to make it more convenient, optimistic, and an easily operative deposition process |31,38|. The essentials of the system are

SHIVAJI UNIVERSITY KOLHAPUR

shown in Fig.2.1.

An experimental set up necessary for the deposition of Sb_2S_3 thin films consists of a dust proof chamber, an oil trough, constant temperature assembly, reaction vessel, a substrate holder etc.

A metallic dust proof chamber of suitable size and dimensions was used in order to avoid contamination of the samples from the dust particles, humidity, natural gases etc.

An oil trough and constant temperature assembly were used to achieve the required temperature. A 2 kW electric heater was used to heat the paraffin oil with an accuracy of ± 0.5°C.

Reaction vessel was a 250 ml glass beaker to which an appropriate amounts of required solutions were mixed. The mixture was then raised to a suitable temperature by fixing the reaction vessel in an oil trough.

A specially designed and fabricated substrate holder as shown in Fig. 2.2 was used for positioning the substrates vertically into the reaction mixture. As the properties of the chemically deposited Sb_2S_3 films are dependent on the orientation, the substrate holder was fabricated in such a way that every substrate remains perpendicular to each other. Because of this, a proper but continuous bulk churning of the reaction mixture in all possible directions was made possible. The stem of the substrate holder was fitted to a constant speed AC gear motor. For the experimental purpose, we adjust the position of the motor so as to dip more than 2/3 portion of the substrates into the reaction mixture.

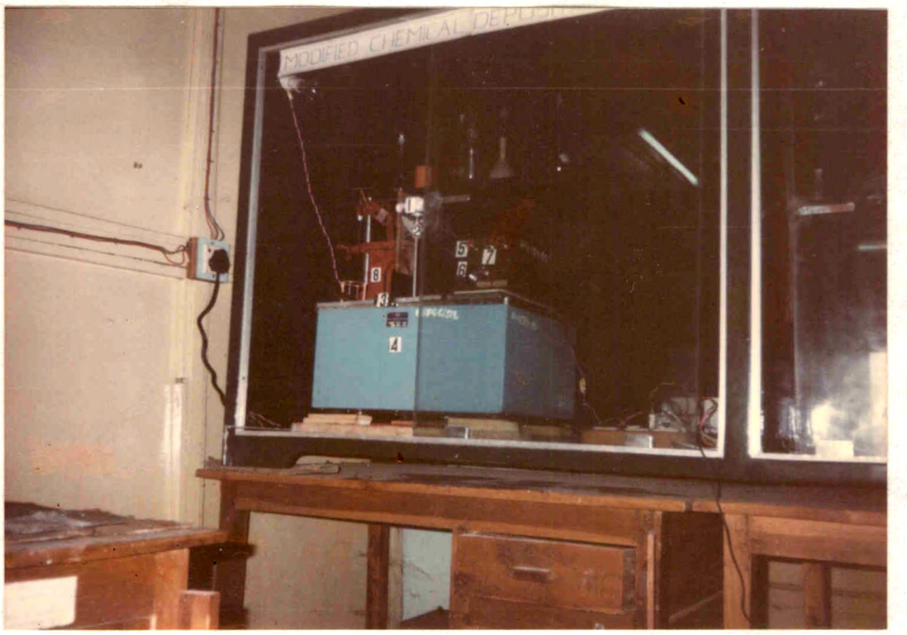

Fig. 2.1 Essentials of a chemical deposition system

1) Constant speed ac gear motor
2) Substrate holder
3) Reaction container
4) Paraffin oil trough
5) Electric heater
6) Temperature control with sensor
7) Oil stirrer
8) Stand for gear motor.

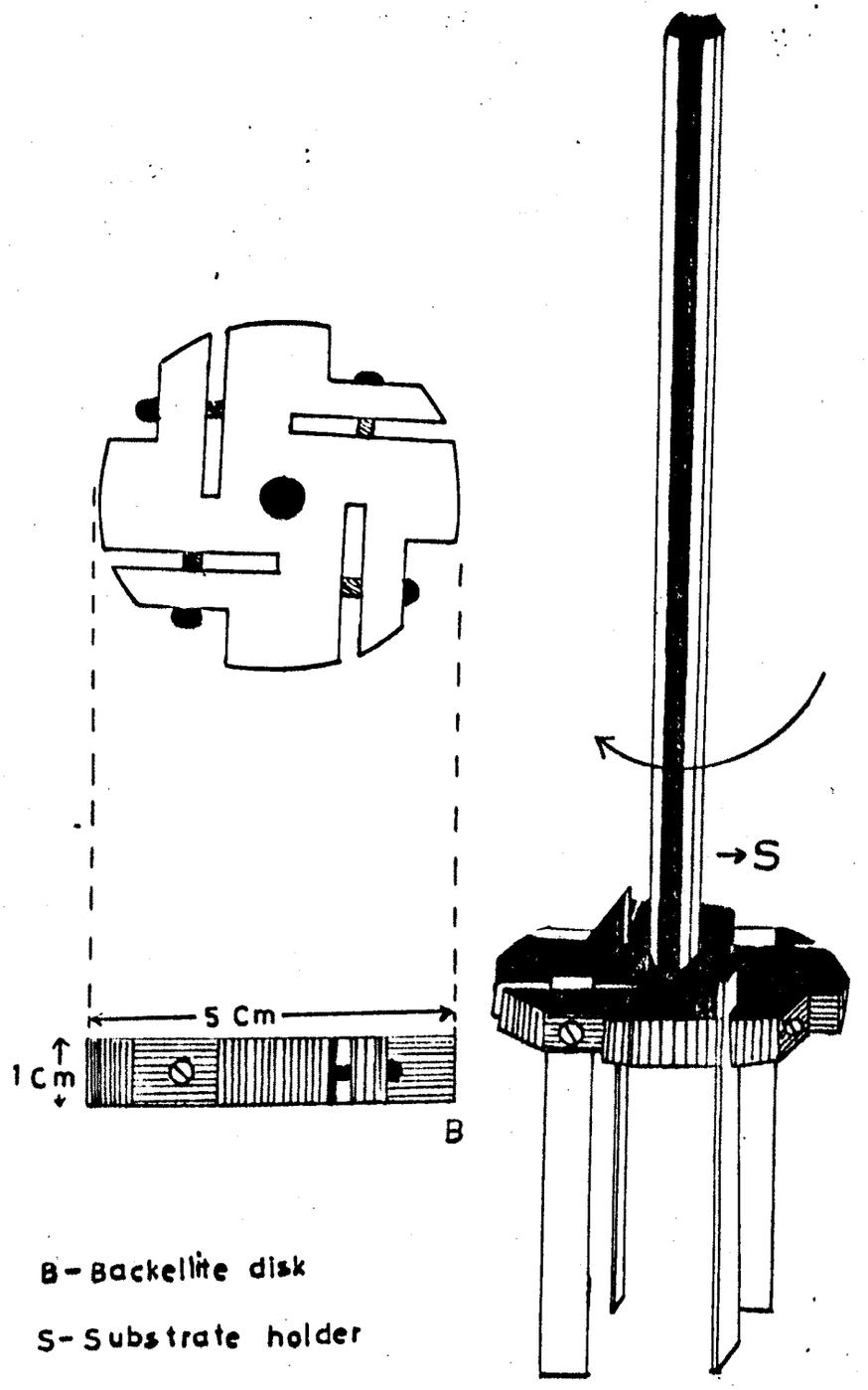

Fig- 2.2 Design of the substrate holder

2.3 Preparation of Sb_2S_3 Thin Films

Todays technology requires development of the new polycrystalline thin film materials using a variety of preparation techniques. The chemical deposition process |31,38| has a special significance in this respect owing to its proven potentialities such as least expensive, low temperature, negligible power consumption, small quantity of active materials, large area of deposition both on accessible and nonaccessible surfaces, nonpollutant etc. Moreover, the film properties can be altered easily by adding a suitable dopant material directly into the chemical bath and no specialised equipments and technology are needed to obtain the material with the desired properties |38|. Film formation by this method is a slow process which allows better stoichiometry and crystallinity compared with other processes.

The substrates used were amorphous glasses and good quality stainless steel. Especially, stainless steel substrates were used while studying the photoelectrochemical properties. Film properties were studied on the amorphous glass substrates. The glass substrates were used for the deposition and the thin film studies were performed on the substrates of the dimensions 72mm x 9mm x 1mm. The stainless steel substrates of approximately the same dimensions were polished to a mirror grade ~~polish~~ and employed for the deposition.

As the thickness of the film layer has a direct bearing on cleanliness of the substrates, the key precaution is taken for the careful cleaning of the substrates before the deposition.

All the solutions were prepared in a doubly distilled water. The following chemicals were used :

i] Antimony potassium tartrate AR-grade Loba Chemie, Bombay.

ii] Thioacetamide- AR grade Loba chemie Bombay.

iii] Triethanolamine - AR grade S.d fiNE - Chem Ltd.Boisar

iv] Ammonia solution-Qualigens Fine Chemicals, Glaxo India,Bombay.

Triethanolamine is used as a complexing agent for the reduction of Sb^{3+} using thioacetamide as the reducing agent. The deposition of thin antimony trisulphide films was carried out in the following ways : A mixture of 100 ml 0.1M antimony potassium tartrate, 100 ml 0.1M thioacetamide and the appropriate amounts of triethanolamine and 17N ammonia was taken in a 250 ml beaker. The substrates of the dimension 72 mm x 9mm x 1mm, attached to a specially designed substrate holder, were kept rotating in a reaction mixture at a constant speed of 80 ± 2 rpm. The reaction was carried out at 93 ± 0.5°C deposition temperature ~~for the deposition temperature~~ for a deposition time qual to half an hour. The samples were detached from the substrate holder, washed in a double distilled water, and kept in a dark desiccator.

2.4 Techniques of Thin Film Characterisation

2.4.1 Thickness measurement

The thickness measurement was carried out by using a weight difference method in which mass, area, and density of the material were considered. The film thickness is related to the mass, area, and density of the material as :

$$t = \frac{m}{A.d}$$

Where, m = weight in grams of the film,

A = area in cm^2 of the film,

d = density of the material.

2.4.2 Microscopic and X-ray diffraction studies

The X-ray diffraction patterns were obtained on these films with a Philips - 1710, X-ray diffractometer with Cuk_α (1.5405 A°) radiation. The angle range of scanning was 10° to 80°. The Scanning Electron Micrographs (SEM) of these samples were obtained with a Scanning Electron Microscope, Stereoscan, 250 MK (III) Camb, Instrument Ltd. U.K (10kV).

2.4.3 Design of conductivity measuring unit and measurement of conductivity

The dark conductivity of the samples was measured by using a conductivity measuring unit as shown in Fig.2.3 (a) designed in our laboratory. It consists of two brass plates of the size 10cm x 5 cm x 0.6 cm. One of the plates is fixed tightly on a asbestos base of the dimension 10 inches x10 inches.Two strip heaters (65 watt) were kept in parallel on the first brass plate and other plate was fixed tightly to the lower plate i.e. strip heaters were sandwiched in between the two brass plates to achieve the uniform temperature. A mica sheet was used to wrap the heaters before being put in between the brass plates so as to achieve the electrical insulation from either of the brass plates. A sample holder of the dimensions 3cm x 0.5 cm x 0.6 cm was designed and fixed permanently exactly at the centre of the

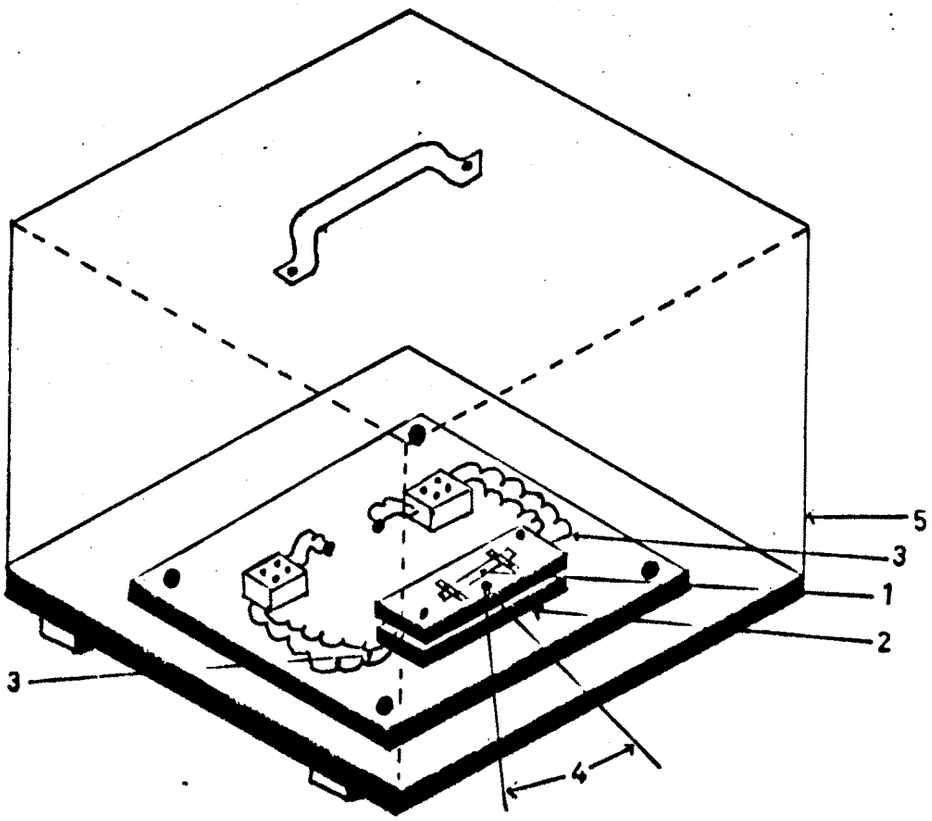

Fig.2.3a) Design for the measurement of conductivity

1) Sample,
2) Brassplates,
3) Electrical heaters,
4) Thermocouple,
5) Shield.

Fig. 2.3(b) Experimental arrangement for the measurement of conductivity,

1) Microvoltmeter
2) Power supply
3) Current meter
4) Conductivity unit.

upper plate. A sample whose conductivity was to be measured was mounted with a copper press contacts below the sample holder. The area under consideration was defined with the rest sample erased.The sample was electrically insulated from upper brass plate and the sample holder by interposing the micapieces at the proper places. Thermal radiation losses were reduced by covering the whole set up in a bakellite box. The box was coated from inside by the asbestos sheets. The working temperature was recorded with a Chromel-Alumel thermocouple (24 guage) fitted at the centre on the top of the upper brass plate. An Aplab regulated power supply unit was used to pass the current through the sample. The potential drop across the sample was measured with a digital multimeter (pla-DM-14B,) and the current through the sample was noted with a sensitive HIL-2665, 4½ digit current meter. A photograph of the necessary experimental set up for the measurement of the conductivity is shown in Fig.2.3 (b).

2.4.4 Design of thermoelectric power unit and measurement of thermoelectric power (TEP)

The necessary conditions and requirements for the thermoelectric power measurements such as maximum temperature difference and minimum contact resistance have been discussed by Bauerie et al |39|. The necessary care was taken to fulfil the above requirements while fabricating the thermoelectric power unit. Fig.2.4.shows a schematic of the thermoelectric power measurement unit and it consist of two copper plates of the dimensions 5cm x 4cm x 1.2cm fitted on a asbestos sheet supported by a bakellite sheet. The plates were arranged in parallel

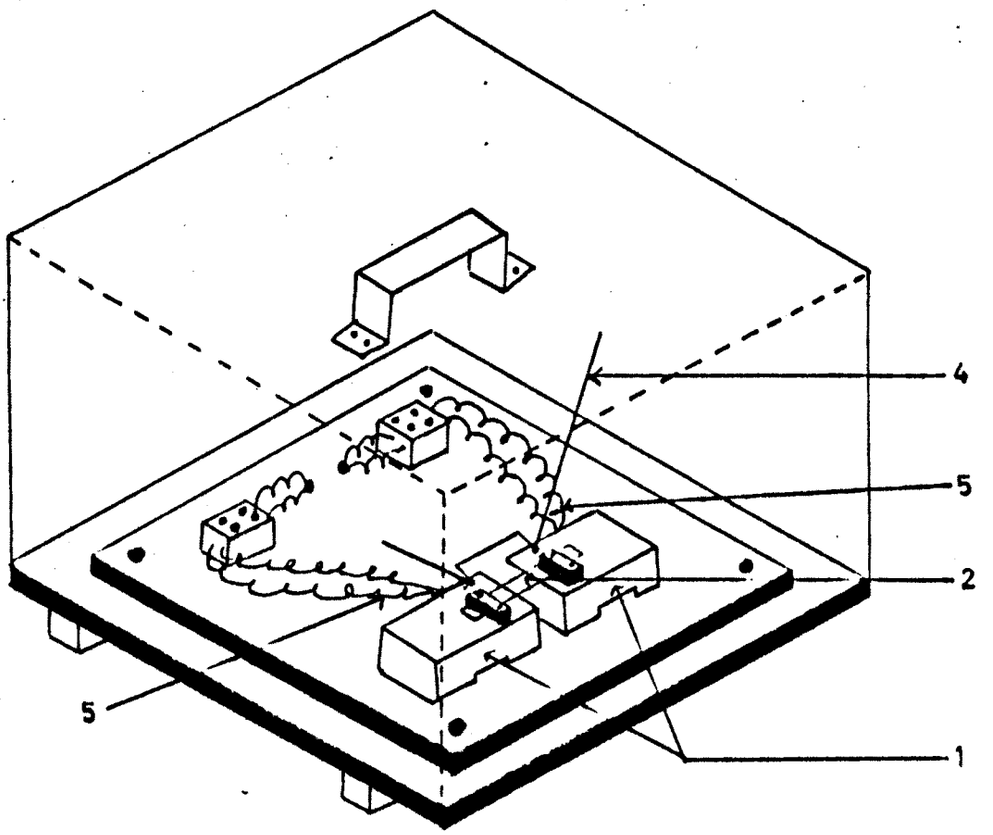

Fig-2.4 Design for the measurement of TEP

1) Copper blocks,
2) Sample,
3) Thermocouple(Mean temperature recorder),
4) Differential thermocouple(Thermovoltage recorder),
5) Heaters.

separated by a distance of 0.5cm. The plates were pitched from the bottom to a size of the miniheater and miniheaters of the different wattage (65 W and 35 W) were fixed in them. Care was taken of the eletrical insulation between the miniheaters and the copper plates by means of mica sheets. A pair of sample holder was fabricated in our laboratory in a similar fashion as that of the conductivity measurement technique and fixed on the top adjescent near edges of the copper blocks lengthwise. The sample size used in this study was 2.5cm x 0.5cm on an amorphous glass substrate and the dimensions of the substrate holder were 3 cm x 0.5 cm x 0.5 cm. The sample was electrically insulated from the copper blocks and the substrate holder by means of a mica pieces. The press copper contacts were used for the measurement. The Chromel- Alumel thermocouples (24 gauge) were fixed on the top of the copper blocks for the temperature measurement. The proper shielding of a unit was made by a bakellite box to minimise the losses due to thermal radiations. Thermovoltage was measured by a 4½ digital display microvoltmeter HIL-2665. The temperature gradient measurement was done with an Agronic-113,4½ digit microvoltmeter.

2.4.5 Optical absorption measurements

The technique is utilised to know the type of transition and to estimate the absorption coefficient and forbidden energy gap of the semiconducting materials. The measurements on optical density as a function of wavelength were performed by using a Spectrophotometer, Hitachi, (JAPAN), in the wavelength range 3500 A° to 8400 A°. The scanning speed was 120 nm/min with a chart

format 10 nm/cm.

2.5 Techniques of Photoelectrochemical (PEC) Characterisations

2.5.1 Design and fabrication of a photoelectrochemical(PEC) cell

The photoelectrochemical cell used in this investigations was fabricated in our laboratory and is shown in Fig.2.5. It is a H shaped tube fitted in a copper pot of a suitable size. A window of the size 2 cm x 0.5 cm was made for illumination of the photoelectrode.

The photoelectrochemical cell was constructed by employing the Sb_2S_3 sample as a photoelectrode, ferrocene in DMSO as an electrolyte (also $K_4Fe(CN)_6$ dissolved in water was used as another electrolyte), and sensitised graphite rod as a counter electrode. The distance between the photoelectrode and the counter eletrode was of the order 0.3 cm. A rubber cork was used for supporting the counter electrode and the photoelectrode. The active area of the sample was defined by a common epoxy resin. The sensitisation of a counter electrode was done with a CoS solution for 24 hours before use in photoelectrochemical cell.

2.5.2. Measurements on photoelectrochemical cell

[a] Nature of contact between Sb_2S_3 and substrate

The fabrication of an efficient photoelectrochemical device requires an ohmic contact between the electrode material and the substrate. A contact is said to be ohmic if it is noninjecting and has a linear I- V relation in both directions. In practice, a contact is assumed to be ohmic, if voltage across it in either direction is negligible compared to

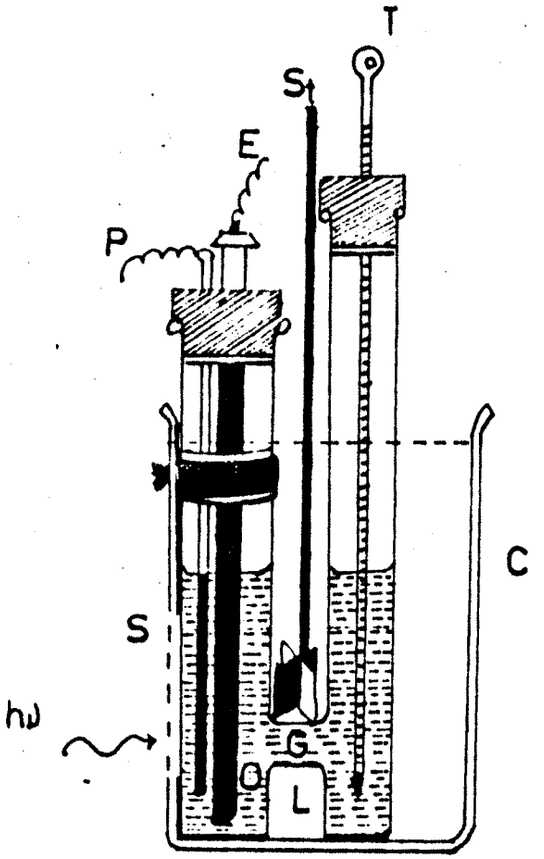

Fig.2.5 Fabrication of a PEC cell.

P - Photoelectrode
E - Counter electrode
G - Glass cell
C - Copper pot
St - Stirrer
L - Liquid electrolyte
S - Slit.

that across the device and hence does not perturb significantly the device performance. Actually the linearity of contact I-V relationship is therefore, not important if the voltage is small. Therefore, the nature of contact between Sb_2S_3 material and stainless steel was examined.

The sample on stainless steel substrate was mounted between two copper press contacts and I-V measurements were recorded. The I- V relation was found straight line for both polarity indicating that the contact is ohmic. The contact resistance observed is small and is only a few ohms in our case |31|.

[b] Electrical and optical characterisation of a PEC cell

Design and constructional details of a photoelectrochemical cell are outlined in section 2.5.1. The electrical properties of a PEC cell give us insight about the charge transfer process across the electrode - electrolyte interface. In view of this, current - voltage characteristics in dark and in light, power output curve, photo, speed, and spectral responses were studied. This section deals with the experimental arrangements for both electrical and optical studies of a photoelectrochemical cell.

i] An experimental arrangement for electrical properties

The circuitry as shown in Fig.2.6 was used to study both the current - voltage and capacitance voltage measurements. The applied junction potential was varied with a 10 turn 1K linear potentiometer and was noted with a 4½ digit Agronic voltmeter - 113. Current flowing through the juction was noted with a HIL-2665, 4½ digit current meter. The cell was

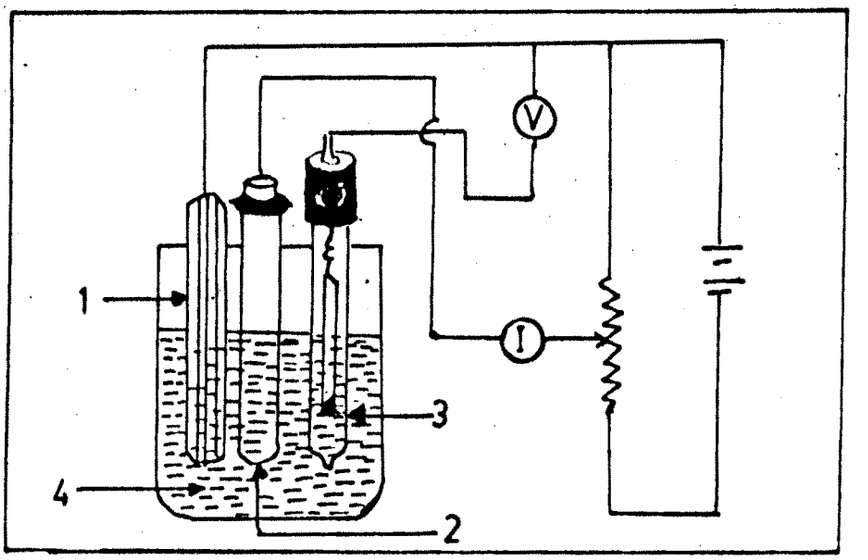

Fig-2.6 Circuit arrangement for electrical characterisation of a PEC cell

1) Photoelectrode

2) Counter electrode

3) Saturated calonel electrode(SCE)

4) An Electrolyte

illuminated through a window by means of a 250 W bulb and care was taken against heating of the cell (water filter was interposed between the lamp and a cell). The C-V measurements were performed under reverse bias of the junction by using the same circuit as above. The differential capacitance was measured by an Aplab-4910 auto ranging digital display capacitance meter at the superimposed frequencies of 1 KHz and 100 Hz. The superimposed AC voltage was 1V PP.

ii] Experimental for optical properties

The measurements of a short circuit current and an open circuit voltage for different intensities of illumination were carried out. The illumination was measured with a digital lux meter, Aplab 101, Bombay. The spectral response of a cell was recorded by using a spectrophotometer (digi. spectronic-20 D Milton Roy, USA) in the wavelength range from 350 nm to 840 nm. Photograph of an experimental setup is as shown in Fig.2.7.

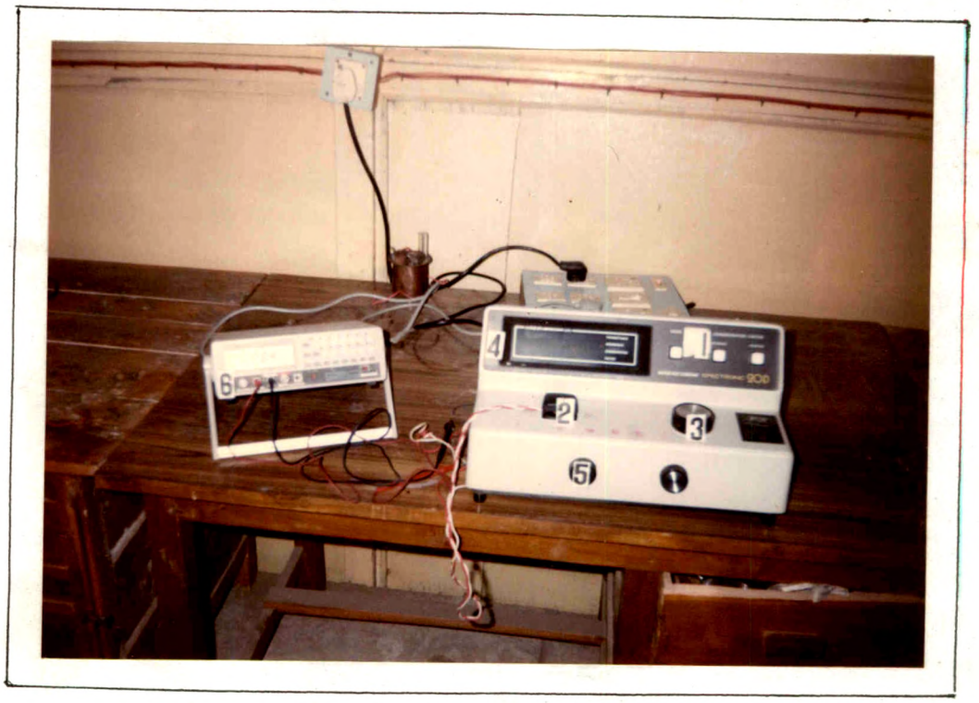

Fig. 2.7 Experimental setup for spectral response of a PEC cell,

1) Spectrophotometer
2) PEC cell
3) Wavelength monitor
4) Wavelength (nm)
5) Set zero and ON/OFF
6) Current meter.