CHAPTER-III

CHAPTER - III

Deposition of Fe_2O_3 By Solution - Gas Interface Technique

3.1 Introduction

3.2 Experimental Set-up for Solution-gas Interface Technique

3.3 Other Experimental Details

3.4 Growth of Films

3.5 Parameters in Growth Process

References

3.1 Introduction

Ferric oxide is an important semiconductor for solar energy conversion[1-5]. The reasons for this are numerous. There is no photocorrosion of Fe_2O_3 in basic and neutral aqueous solutions. Its band-gap of about 2 eV allows the absorption of roughly one quarter of the solar radiations. It is possible to change the semiconducting character of Fe_2O_3 from n to p-type with an appropriate dopant [6-8]. Based on this property, a cell made up of a Fe_2O_3 photoanode and a Fe_2O_3 photocathode was used to decompose water[9]. Fe_2O_3 has also been used as a starting material in film production, as in sputtering [10-11], painting [12] or powder sintering [13-14].

Various methods have been used to obtain the Fe_2O_3 films. Fe_2O_3 has been produced by electrical [15] or thermal [15-18] oxidation of iron and also by reactive sputtering of Fe in presence of O_2[17, 19]. Fe_2O_3 has also been obtained from spray-pyrolysis[17, 20-21] or chemical vapour deposition [22] of iron compounds.

Thin Fe_2O_3 films are of particular interest for fabrication of large area photodiode arrys. Thin film processes, technology and devices have undergone phenomenal development primarily because of its application in solar energy conversion and energy storage devices. Considering the simplicity, economics and input energy, large area thin films necessarily have to be deposited by chemical technique. In this work we demonstrate that it is possible to use solution-gas interface technique to obtain large areas of thin photoactive Fe_2O_3 films. This method has wider applications for

obtaining pure as well as doped and / or mixed films and requires practically no sophisticated equipments as are needed in most of the other deposition techniques. Solution-gas interface technique is presently attracting considerable attention because it offers certain unique advantages over other techniques i.e. low cost, inexpensive, simplicity in assembly and operation.

3.2 Experimental Set-up for Solution-gas Interface Technique

The photograph of the solution-gas interface technique is shown in Fig. 3.2a and schematic diagram of the experimental set up in Fig. 3.2b. It consists of mainly, (a) preparation of NH_3, (b) gas exposure unit, (c) solution container and (d) mechanical arrangement. The cross-sectional view of the experimental set-up, shown in Fig. 3.2c, gives the open heart arrangement of these parts.

a) Preparation of NH_3

A small beaker, containing liquor ammonia, is kept below the inverted glass bell-jar. Due to vapourization ammonia gas is formed and the space inside the bell-jar is filled with the ammohia gas. This process continues till the air in the bell-jar is saturated with the ammonia gas.

b) Gas Exposure Unit

The quality and uniformity of thin films is dependent of the gas exposure unit and it is shown in Fig. 3.2c. It consists of glass wool (G), nylon cloth (N), plastic mesh (W) and metallic sheet (M). Uniformly distributed pieces of the glass wool are

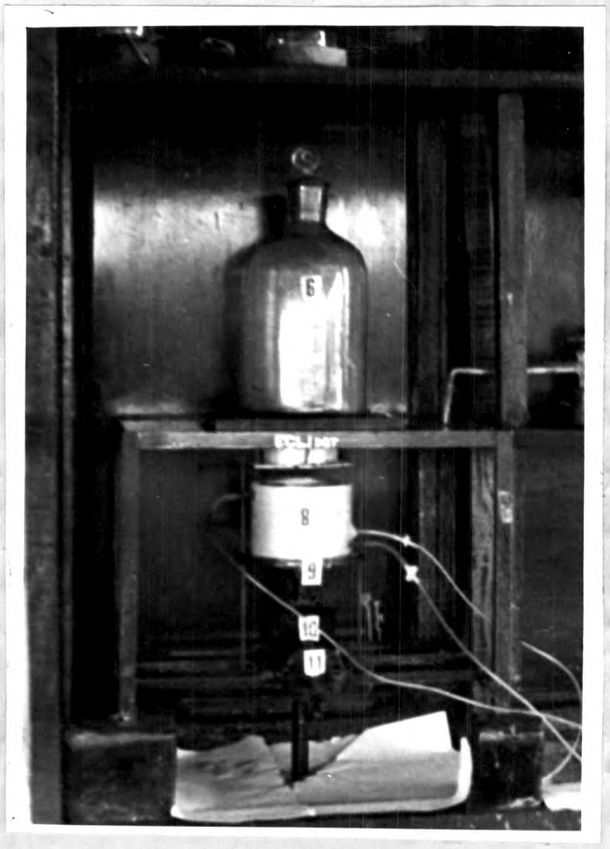

Fig. 3.2a Photograph of the Solution-Gas Interface Technique

i) 6: Gas Chamber
ii) 7: Gas exposure Unit
ii) 8: Solution Container
iv) 9: Circular disc
v) 10: Gear Wheel
vi) 11: Axle Wheel

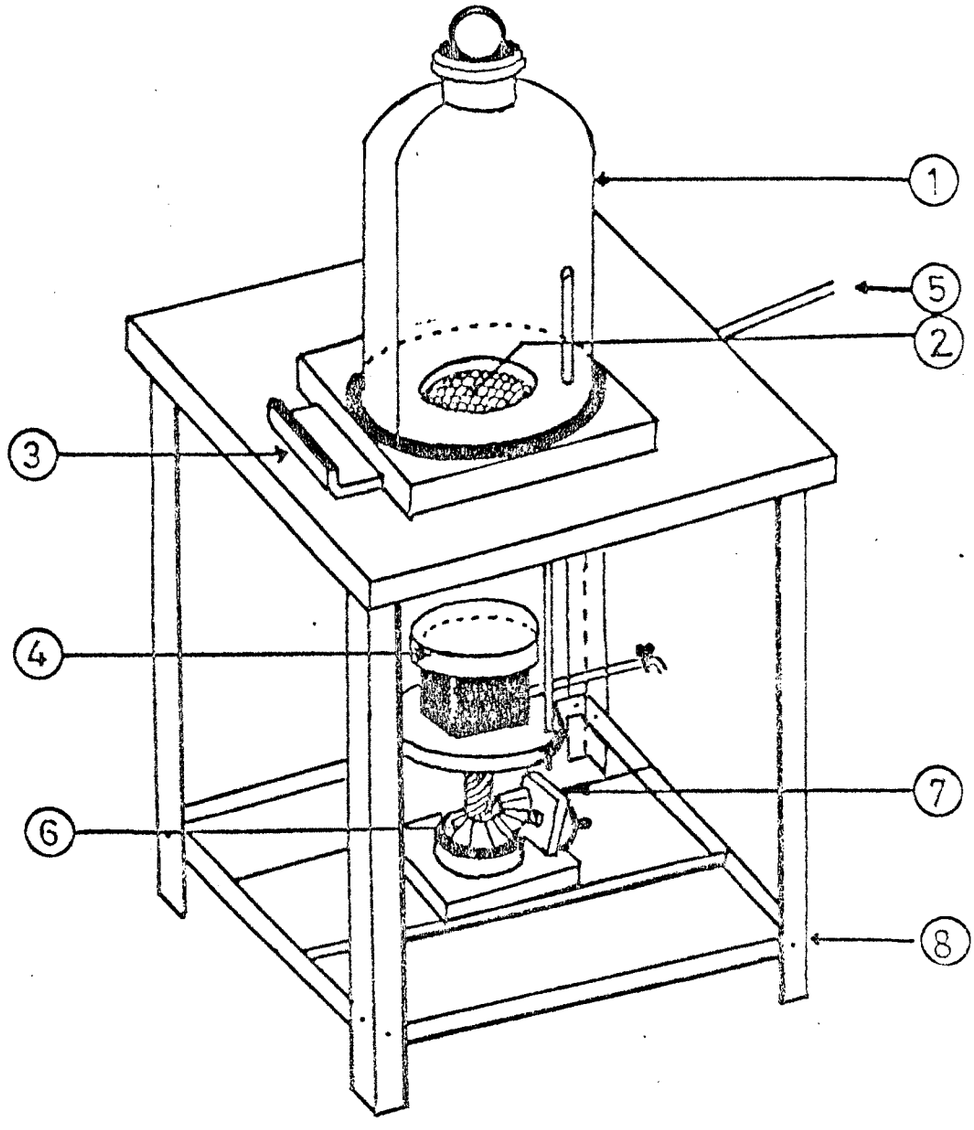

Fig. 3.2b Schematic of the solution-gas interface technique:-

1) Gas chamber 2) Gas exposure unit
3) Shutter 4) Solution-container
5) Gas inlet 6) Gear wheel
7) Axle, wheel 8) Metallic stand

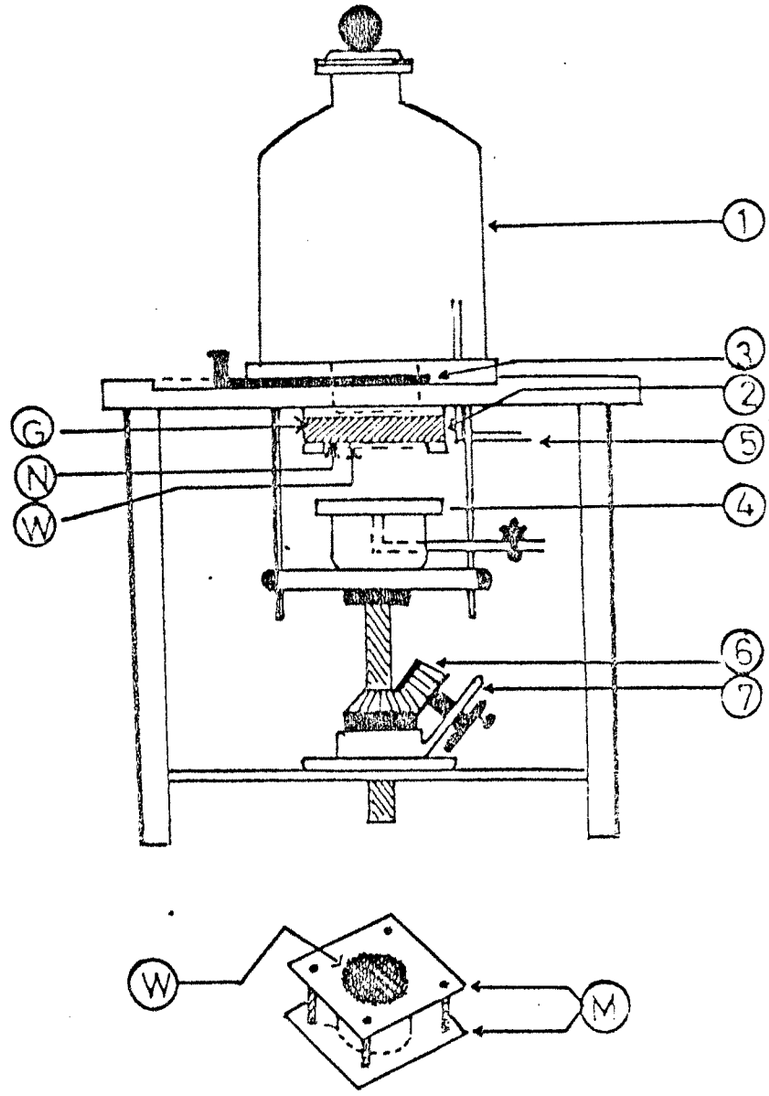

Fig. 3.2c Cross sectional view of experimental set up for solution-gas interface technique:-

1) Gas chamber 2) Uniform gas exposure unit, M-metalic sheet, W-plastic guaze, N-nylon cloth, G-glass wool.
3) Shutter, 4) Solution container,
5) Purified NH_3 gas, 6) Gear wheel,
7) Axial wheel.

sandwiched between nylon cloth, plastic mesh and metal sheet with a circular hole punched in it. As shown in Fig. 3.2c there is an arrangement to open and to close-up the gas flow (shutter - 3) through the uniform gas exposure unit - 2. When the shutter is opehed, the gas diffused uniformly through this unit. The diffusion of gas through the gas exposure unit can be controlled by increasing the thickness of the gas exposure unit. Further the rate of diffusion of gas through this unit depends on the pressure of the gas in the gas chamber.

c) Solution Container

The schematic diagram of the solution container is shown in Fig. 3.2d. The salt solution of the metal is located in the solution container, which is modified so that the solution can be drained slowly from the bottom of the container without disturbing the solution surface. The glass substrates of the size 2.5 cm x 7.5 cm. are kept emmersed in the solution on a rectangular glass stand. At the bottom of the solution container a glass tube (5 mm diameter) is fitted and the other end of which is connected to a flexible plastic tube (5 mm diameter) which has a stop-cock for control of flow of the solution. The solution from the container can be drained out slowly with the help of stop-cock.

d) Mechanical Arrangement

A vibration free mechanical arrangement was used to move the solution container up and down without disturbing the solution surface. It consists of a circular disc fixed on a gear and axle

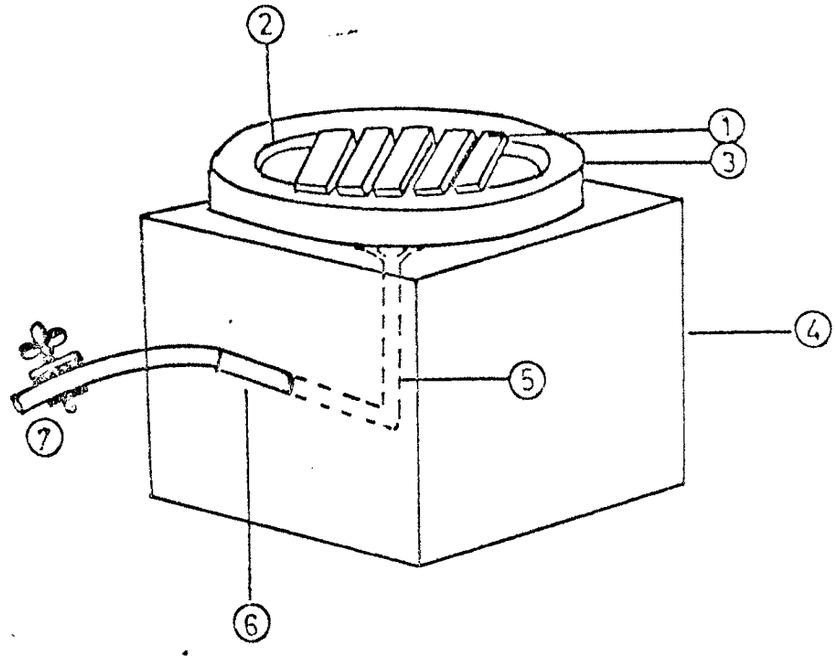

Fig. 3.2d Schematic diagram of the solution container.

1) Glass substrate
2) Rectangular glass stand
3) Solution container
4) Wooden block
5) Glass tube
6) Flexible saline tube
7) stop-cock.

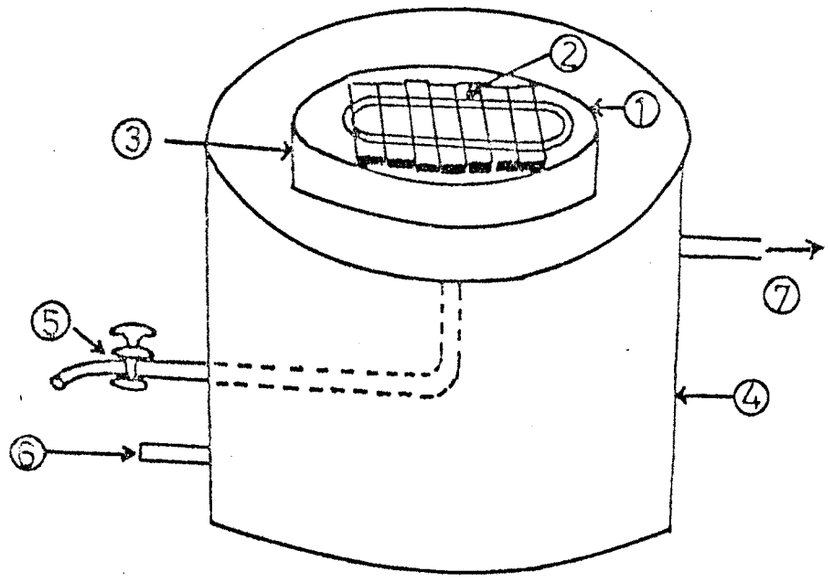

Fig. 3.2e Constant temperature assembly for solution-gas interface film growth:

1) Solution container; 2) Glass substrates;
3) Glass stand; 4) Aluminum bath.
5) Solution outlet; 6) Water inlet;
7) Water outlet.

wheel, with the help of which the circular disc can be moved up and down. This assembly is fixed on a metalic stand as shown in Fig. 3.2c. This mechanical arrangement helps to adjust the distance between the gas exposure unit and the solution container.

3.3 Other Experimental Details

a) Substrate Cleaning

Cleanliness of the substrate for the thin film deposition is one of the most important factors for obtaining the reproducibility of the properties. It also affects the smoothness, brightness, uniformity, adherence and porosity of the film. The technique to be adopted for cleaning depends upon the nature of the substrate, degree of cleanliness required and the nature of contaminants to be removed. The common contaminants are grese, adsorbed water, airborne dust, lint and oil particles.

Cleaning is the process of breaking of adsorption bonds between the substrate and the contaminants without damaging the substrate. There are many methods to supply energy for breaking these bonds, such as heating, bombarding by ions, chemical action and scrubbing. For obtaining good results it is better to carry out the following cleaning procedure for the conducting and non-conducting glass substrates.

(i) The substrates were first washed with the detergent solution 'Teepol' and then with double distilled water.

(ii) These substrates were boiled in chromic acid for few minutes (5 - 10 minutes).

8231
A.

(iii) After that each substrate was cleaned with double distilled water separately.

(iv) To remove the acid contamination, substrates were kept in a 10 percent NaOH solution for few minutes.

(v) Again the substrates were washed with double distilled water and boiled for about 10 minutes in double distilled water.

(vi) Lastly substrates were ultrosonically cleaned.

(vii) Drying of the substrate was done in the vapour of alcohol with the help of special stand kept in a steel box which was heated for few minutes.

b) Preparation of $FeCl_3$ Solution

Freshly prepared double distilled water was used to prepare the solution. Initial ingradients used for Fe_2O_3 films were as follows :

(i) Ferric chloride ($FeCl_3$, $6H_2O$) supplied by Sarabhai Merck.

(ii) G.R. Grade Hydrochloric acid (HCl) supplied by Sarabhai M Chemicals.

To make 250 cc of 2 molar solution of Ferric Chloride, the required quantity of Ferric-Chloride was taken by weighing on semi-microbalance and then it was dissolved in 250 cc of double distilled water. Slight turbidity observed in the solution was due to impurity present in the ingradient $FeCl_3$, $6H_2O$. It was removed by adding a very small amount of concentrated pure hydrochloric acid (HCl) (10 cc/litre) in total 250 cc $FeCl_3$ solution and then it was boiled

for few minutes and cooled. After cooling it was filtered with Whatmann Filter paper no 41, removing the precipitated impurities. Then that solution was used in the solution container.

3.4 Growth of Films

a) Deposition of Fe_2O_3 films

A thin film of the Fe_2O_3 was formed at the interface of the solution and gas using the above experimental arrangement. A solution containing metal ions was taken in a solution container and the glass substrates were kept, emmersed in the solution, on a rectangular glass stand. The solution container was then fitted to a gas exposure unit. The solution surface was exposed slowly to the ammonia gas. When the shutter was opened the ammonia gas diffused uniformly through the exposure unit. The gas was allowed to diffuse through this unit for about 1 - 2 minutes and then the shutter was closed, so that a thin uniform layer of the film was formed on the surface of the solution. The unused solution was slowly drained out (without disturbing the thin solid film) through the tube at the bottom of the solution container. The thin uniform film was supported on glass substrates. The solution container was then removed by means of a mechanical arrangement. Then substrates were taken out and films were dried and heated to 450 ^{o}C.

b) Mechanism of Film Formation

Thin films of $Fe(OH)_3$ are formed simply by exposing the solution surface to the ammonia gas. The solution contains a cation and the gas an anion and due to the chemical reaction between these

two ionic species a thin solid film is formed at the interface of the solution and gas. Thus pure and mixed thin films of the substance can be grown at the interface of the solution and a gas, provided that the metal ions or anions have strong affinity towards the gas molecules or radicles. The rate of reaction of ammonia gas with the solution surface can be controlled by maintaining the pH of the solution.

The Ferric hydroxide films were grown at the interface between the ammonia gas and $FeCl_3$ solution, and then on heating Ferric hydroxide it get converted into Ferric - Oxide.

The reactions are as follows :

1) $NH_3 + H_2O \longrightarrow NH_4OH$

2) $2FeCl_3 + 6NH_4OH \longrightarrow 6NH_4Cl + 2Fe(OH)_3$

3) $2Fe(OH)_3 \xrightarrow{heat} Fe_2O_3 + 3H_2O$

3.5 Parameters in Growth Process

The growth of Fe_2O_3 films by solution-gas interface technique is found to depend on the various preparative parameters as follows :

a) Composition of the Solution

Concentration of the salt solution that was used to grow the films, varied from 0.02 M to 2 M. At low concentration the film formed is not uniform and continuous, as the required number of cationic species may not be available on the surface of the solution.

However, as the concentration increases the quality and uniformity of the film increases. The variation of thickness with solution concentration is shown in Fig. 4.1 The film thickness increases upto 1.5 M concentration and attains steady value.

b) Effect of pH

The growth of thin film in the present method is very much dependent on the pH value of the solution. An increase in pH causes increase in relative molecular area. However, as a result of this, the molecular cohesive binding forces between the molecules are expected to decrease causing reduced stability of the film on the solution surface. With the increase in pH the solubility of NH_3 gas increases relatively and may result in hydroxide precipitation. The deleterious effects can be avoided by optimizing the pH value, so that the desired quality of the iron-oxide films can be achieved. In case of the low pH value the metal hydroxide is not precipitated and reaction of the film with the solution is comparatively small. The films deposited from the low pH value have been observed to exhibit minimum defects. The optimum pH value is thus determined as three, in which both uniformity and adhesion are satisfactory and there are minimum defects. Relatively low pH value (<7) is desirable to produce thin Iron-Oxide films.

c) Effect of Gas Exposing Time

A long exposure of the NH_3 gas over the solution surface results in precipitate formation by rupturing the film. Therefore, specific time is required for completion of the reaction. In a

surface chemical reaction the bond breaking and making processes involve their own kinetics and time intervals. In the present study the gas exposing time was varied from 20 sec. to 200 sec. It is found that uniform films are formed for times between 120 sec. to 150 sec.

R E F E R E N C E S

1 R.K. Quinn, R.D. Nasby and R.J. Baughman, Mater. Res. Bull. 11, 1011, (1976).

2 J.C. Launay and G. Horowitz. J. Cryst. Growth, 57, 118, (1982).

3 R. Shinar and J.H. Kennedy, This Journal, 130, 392, (1983).

4 E. Pollert, J. Hejtmanek, J.P. Doumerc, J.C. Launay and P. Hagenmuller, Z. Anorg. Allg. Chem. 528, 202, (1985).

5 C. Sanchez, M. Hendewerk, K.D. Sieber and G.A. Somorjai, J. Solid State Chem. 61, 47, (1986).

6 G.H. Geiger and J.B. Wagner, Trans. Metall. Soc. AIME, 233, 2092, (1965).

7 R.F.G. Gardner, R.L. Moss and D.W. Tanner, Br. J. Appl. Phys. 17, 55, (1966).

8 B.M. Warnes, F.F. Aplan and G. Simkovich, Solid State Ionics, 12, 271, (1984).

9 J.E. Turner, M. Hendewerk and G.A. Somorjai, Chem. Phys. Lett., 105, 581, (1984).

10 A.M. Redon, J. Vigneron, R. Heindl, C. Sella, C. Martin and J.P. Dalbera, Solar Cells 3, 179, (1981).

11 F.A. Benko, J. Longo and F.P. Koffyberg, This Journal, 132, 609, (1985).

12 L. Changyi, C. Shengmin, S.M. Wilhelm, S.D. Kapusta, A. Viehbeck and N. Hackerman, Scientia Sinica (B), 27, 225, (1984).

13 K.G. McGregor, M. Calvin and J.W. Otvos, J. Appl. Phys. 50, 369, (1979).

14 A.H.A. Tinnemans, T.P.M. Koster, D.H.M.W. Thewissen and A. Mackor, Ber. Bunsenges. Phys. Chem, 90, 383, (1986).

15 S.M. Wilhelm, K.S. Yun, L.W. Ballenger and N. Hackerman, This Journal, 126, 419, (1979).

16 A.F. Sammells and P.G.P. Ang, This Journal, 126, 1831),(1979).

17 P. Iwanski, J.S. Curran, W. Gissler and R. Memming ibid, 128, 2128, (1981).

18 N. Giordano, V. Antonucci and J.C.J. Bart, Adv. Hydrogen Energy, 3, 777, (1982).

19 L.C. Schumacker, S. Mamiche-Afara, M.F. Weber, and M.J. Dignam, This Journal, 132, 2945, (1985).

20 M. Sharon and B.M. Prasad, Solar Energy Mater, 8, 457, (1983).

21 K. Itoh and J. O.M. Bockris, J. Appl. Phys. 56, 874, (1984).

22 K.L. Hardee and A.J. Bard, This Journal, 123, 1024, (1976).