CHAPTER - III

ELECTRICAL PROPERTIES

Two things fill our mind with ever-increasing wonder and awe, the more often and the more intensely the reflection dwells on them, the properties of substances before us and law within it.

- Kant

CHAPTER – III
ELECTRICAL PROPERTIES

PART A : D.C. RESISTIVITY

INTRODUCTION

Historically ferrites attracted the attention of physicists and technologists since they are magnetic semiconductors. Van Uitert [1] has described how incorporation of small amounts of manganese or cobalt alters the resistance of ferrites.

The conduction mechanism in ferrites is quite different from that in semiconductors. In ferrites the temperature dependence of mobility affects the conductivity and the carrier concentration is almost unaffected by temperature variation.

The charge carriers in ferrites are localized at the magnetic atoms. In ferrites, the cations are surrounded by close-packed oxygen anions and as a first approximation can well be treated as isolated from each other. There will be little direct overlap of the anion charge clouds or orbitals. Alternatively, the electrons associated with particular on will largely remain isolated and hence a localized electron model is more appropriate in the case of ferrites rather than the band model. This accounts for the basically insulating nature of these materials.

These distinctive features of ferrites have led to hopping electron model [2, 3]. Conducting in these systems is found to be due to the

presence of iron with different valence states at crystallographically equivalent lattice points [4]. Conduction is due to exchange of the 3d electrons localized at the metal ions, from Fe^{3+} to Fe^{2+} [5].

Many models have been suggested to account for the electrical properties. Jonker [6] derived an expression for mobility from hopping conduction model, based on localised levels of electrons. Band polaron model based on electron transition between localized cells was also suggested [7]. Based on the fact that ferrites are ferrimagnetic materials and their magnetic properties would influence their electrical properties, few models have been evolved [8, 9]. Small polaron model has been introduced by Haubenreisser [10]. Lorentz and Ihle [11, 12] have explained the electrical properties on the basis of thermally activated motion of electrons and Srinivasan [13] has resorted to phonon induced tunnelling.

The electrical properties of ferrites are affected by the distribution of cations in the sites, magnetic and non-magnetic substitutions, the amount of Fe^{2+} present, sintering conditions, grain size and grain growth etc. The electrical properties of nickel ferrites have been studied by many investigators [14-17]. Murthy and Sobanadri [18] have investigated the d.c. conductivity of some Ni-Zn ferrites as a function of temperature from room temperature to 300^0C. The ferrites which contains iron in excess shows n-type conduction and those with iron

deficiency show p-type conduction. The d.c. resistivity in Ni-Cd ferrites is investigated by Patil et al. [19]. The effect of Al^{3+} substitution on electrical properties of Ni-Sn ferrites is investigated by Babbar and Candel [20]. Ni-Sn ferrites of different compositions have been investigated by various other workers [21, 22, 23].

3.A.1 Conduction in Ferrites :

At room temperature ferrites have wide range of resistivities from 10^{-3} to 10^{11} Ω cm. The low and higher resistivities of ferrites are mainly explained on the basis of actual location of cations in spinel structure and hopping mechanism. Their high conductivity is due to simultaneous presence of ferrous and ferric ions in crystallograhically equivalent sites. The high resistivity in ferrite is associated with the occupation of B-sites by divalent metal ions and trivalent iron ions. Such an arrangement requires higher activation energy for hopping of electrons. The two mechanisms of conductivity can be represented as,

$$Fe^{2+} + Fe^{3+} \longleftrightarrow Fe^{3+} + Fe^{2+} + \Delta E$$

$$Me^{2+} + Fe^{3+} \longleftrightarrow Me^{3+} + Fe^{2+} + \Delta E \qquad \ldots \quad (3.1)$$

Where ΔE is activation energy. The energy required to transfer an electron from Me^{2+} to Fe^{3+} and vice-versa. Me denotes divalent metal ions like Cu, co, Mg, Mn, Ni and Cd etc.

The conductivity of ferrite can be explained in terms of electronic charge carriers like electrons and holes by the relation

$$\sigma = e\,(ne\mu_e + nh\mu_n) \qquad \ldots 3.2$$

where n and μ stand for concentration and mobilities of electrons (e) and holes (h) respectively. As electrons move in one direction, the holes move in opposite direction. Though the velocities of electrons and holes are the same, mobility of electron is much higher than mobility of holes.

The hopping mechanism of conductivity in ferrite is associated with activation energy which can be calculated from log ρ vs 1/T plots. As temperature increases, the ferrite changes its magnetic state from a ordered ferrimagnetic state to a disordered paramagnetic state. When such a change occurs there is an abrupt change in activation energy. It is observed that, activation energy in ferrimagnetic region is less than the activation energy in paramagnetic region.

In ferrites, two types of scatterings exist, the phonon scattering arising out of thermal vibration of lattice and the impurity scattering. The lattice scattering increases with increasing amplitude of vibration at higher temperature. The mobility is proportional to the mean free path between scattering event. Hence conductivity becomes temperature dependent and it can be expressed as –

$$\sigma = \sigma_o \exp(\Delta E / kT) \qquad \ldots \quad 3.3$$

σ_o - temperature independent constant

k - Boltzman constant

Further in ferrite lattice, there is an interaction between orbitals of neighbouring ions and electrons resulting into the polarization of lattice. This effect is more pronounced due to strong Coulomb interaction in ionic crystals such as ferrites. The combination of an electron and its polarization field is called as polaron. When such an association is weak it constitutes large polarons. Such polarons are found in ionic crystals and conductivity of ionic crystal is similar to the one explained above. But when electron plus lattice deformation has a linear dimension smaller than lattice constant, it constitutes small polarons. They are usually found in covalent crystals. Due to such a deformation the effective mass of electron increases as it practically drags the ions along with it. Therefore mobility of electron decreases and becomes highly temperature dependent. With the help of binding energy Ep of electron and polarized lattice the mobility of electron can be written as,

$$\mu_{polaron} \ \alpha \ \exp.(-Ep/kT) \qquad \ldots(3.4)$$

Where, $Ep = \dfrac{e^2}{K_{eff.}\, Vp}$

Vp - dimension of lattice deformation

$1/k_{eff}$ - difference of reciprocal of optical and static dielectric constant

The mobility is always less than 1 cm^2/ v – sec and is very low. With the help of small polarons the conductivity is related to Eg, Ep and T by relation

$$\sigma = n\mu \exp(-Eg / kT)\ (-Ep/ kT) \qquad \ldots \quad (3.5)$$

Due to polarization, the electrons are trapped at the potential well. When such a potential well is deep enough, the electron may be trapped at lattice site. Therefore, its transition to neighbouring site may be governed by thermal activation. Hence due to thermal activation lattice is set into periodic vibrations which are quantized into phonons.

At high temperatures electrons jump from one site to another by thermal activation. The hopping mechanism contributes to conductivity at high temperature. At low temperatures electrons tunnel slowly through crystal resulting into small conductivity.

At low temperatures polarons behave as particles moving in the narrow band, whereas at high temperatures small polaron motion results by the absorption of one or more phonons. Therefore, the process is essentially a hopping mechanism. When a tunnelling time is less than the time for successive hopping transition, conduction by small polaron becomes more predominant. The small polaron model for conductivity mechanism is explained earlier [1, 24-27]. From the plot of logarithm of resistivity versus reciprocal of temperature, it is noticed that the slope of log ρ vs $1/T \times 10^3\ k^{-1}$ curve changes at a particular temperature which is

identified as Curie temperature (T_c). It is also observed that resistivity of samples decreases with increasing temperature. The variation of resistivity with temperature obeys the exponential relation

$$\rho = \rho_o \exp(-\Delta E/kT) \qquad \ldots \qquad (3.6)$$

where ΔE – activation energy and can be interpreted as the energy required to cause the electron jump.

The change in slopes is due to disordering of electron spin at that temperature (T_c). These breaks suggest that, there is some predominant change in conduction mechanism due to magnetic phase transition. The high activation energy is associated with a high resistivity at room temperature. The dependence of resistivity on the stoichiometry was studied by Van Uitert [16] and Jonkar [28].

In stoichiometric Ni ferrites there is some tendency for valancy changes according to

$$N_1^{2+} + Fe^{3+} \rightleftharpoons Ni^{3+} + Fe^{2+}$$

Both the Nickel and iron ions, having two different valancies, provide conductivity mechanism.

3.A.2 Experimental Techniques :

The experimental set up for d.c. electrical resistivity is shown in Figure 3.A.1. It consists of an electrically heated furnace, a digital d.c. microvoltmeter and a transistorized power supply unit (TPSU) to

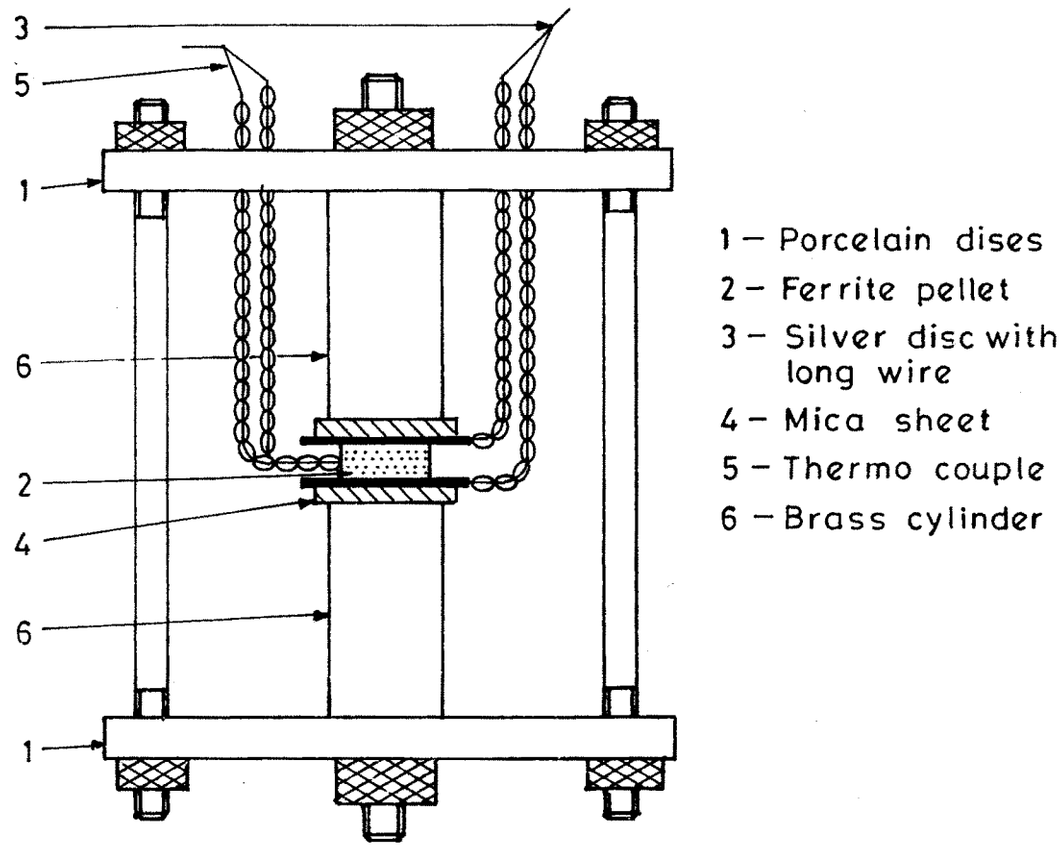

FIG. THE CONDUCTIVITY CELL.

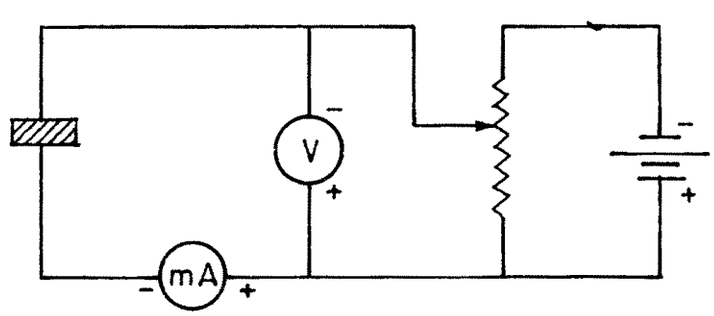

FIG. 3·A·1 – CIRCUIT DIAGRAM FOR ELECTRICAL RESISTIVITY.

provide the d.c. voltage. The silver paste was applied on both sides of the pellet for good ohmic contacts. The pellet was mounted in a sample holder consisting of two steel rods in which the sample can be sandwiched tightly with the help of screws. The cell was then placed in a furnace. A calibrated Cromel Alumel thermocouple was used to measure the temperature of the furnace. Resistivity measurement were carried out by measuring the current at a constant voltage of 2 volts from room temperature to 850K and resistivity was determined by the relation

$$\rho = \frac{\pi r^2 . V}{tI} \qquad \ldots \quad 3.7$$

t - thickness of pellet
r - radius of pellet
I - current through the sample

3.A.3 Results and Discussion

a) Variation of resistivity with Temperature :

The results on the measurement of d.c. resistivity of $Ni_{0.7-x}$ Mg_x $Zn_{0.3}$ Al_2O_4 series are plotted in Figs. 3.A.2, 3.A.3, and 3.A.4 for x = 0.1 – 0.5. It is observed that slope of log ρ versus 1/T x 10^3k changes at a particular temperature in the first three samples (x = 0.1 - x = 0.3) which is identified as Curie temperature (Figure 3.A.2 and 3.A.3). For x = 0.4 and x = 0.5 graph is found to be a straight line (Fig. 3.A.4).

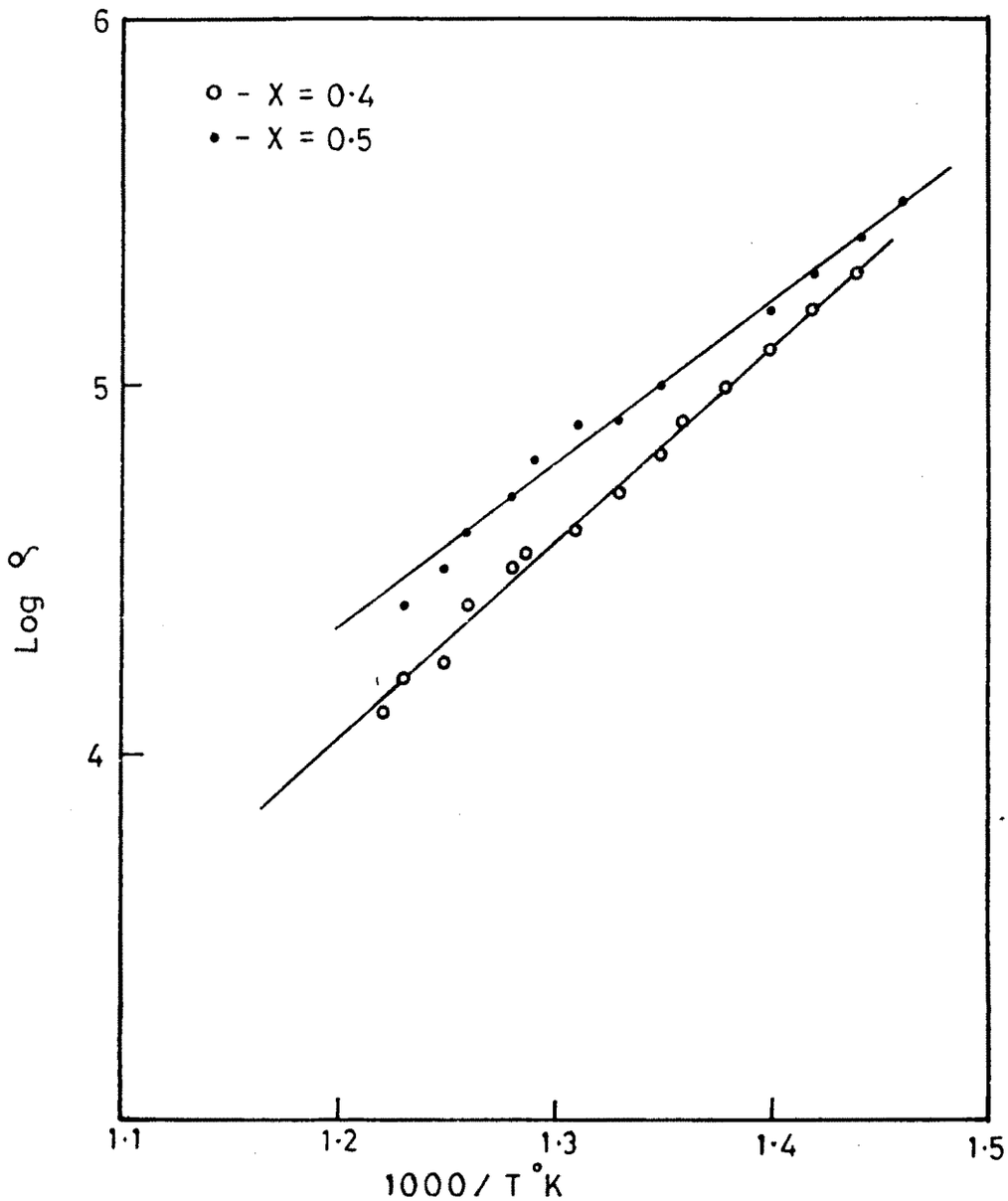

FIG.3·A·3 - LOG ρ V/S 1000/T °K OF $Ni_{0.7-x}Mg_xZn_{0.3}Fe_2O_4$.

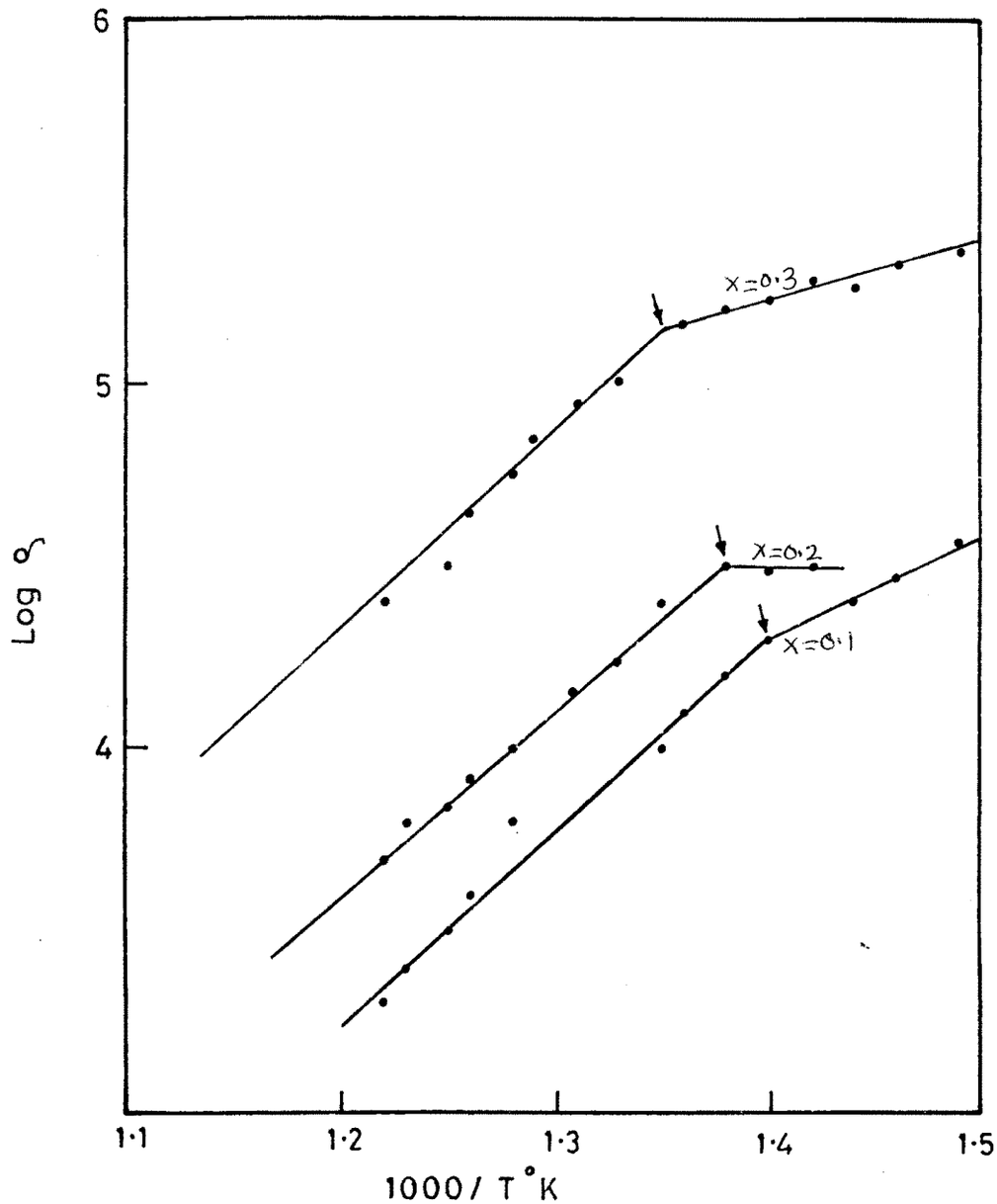

FIG. 3·A2 – LOG ρ V/S 1000/ T °K OF $Ni_{0.7-x}Mg_xZn_{0.3}Fe_2O_4$.

The observed discontinuities in the log ρ versus $1/T \times 10^3\ k^{-1}$ have been attributed to several reasons by different authors. It has been stated by Irkhin et al. [30] that change in the slope of straight line should occur while passing through the Curie point. The point separates the upper ferrimagnetic region from lower paramagnetic region, as the spin-spin interaction vanishes due to thermal vibrations. Similar results have been reported by Komar and Klivshin [31] in the case of several other ferrites and they have stated that the change in the activation energy of conduction at a particular temperature has some relation with the ferrimagnetic Curie temperature of the ferrites. The breaks in the conductivity plots may also be due to some other reasons like conduction mechanism [32]. The effect of Al^{3+} substitution in Ni-Zn ferrite shows such discontinuities as studied by Chandraprakash [33]. Similar results are reported by Kakatkar [34].

The magnetic order in spinel ferrites is mainly due to superexchange interaction mechanism occuring between metal ions in A and B sublattices [30].

The activation energies corresponding to the para and ferrimagnetic regions were calculated using equation (3.6) and are presented in Table 3.A.1. The activation energy in paramagnetic region is found to be higher than that of ferrimagnetic region in agreement with the theory developed by Irkhin and Turov [30].

The change in the activation energy is due to the splitting of the conduction and valence bands below Tc. above the Curie temperature the bands are degenerate for two spin directions. Therefore, a reduction in the activation energy is expected as the system undergoes transition from paramagnetic to ferrimagnetic state.

In the present case as the composition changes to x = 0.4 and x = 0.5 no transition is observed. This has been attributed to the fact that as the concentration of Mg^{2+} increases the magnetic nature of the ferrite decreases. Therefore a well defined transition of Curie point is not seen. The results are in agreement with the observation of Rustamov et al. [35].

It is clear from the table 3.1 that the activation energies in the present samples are less than 0.2 eV indicating that the conduction is due to electron hopping [36].

The Curie temperature given in Table 3.A.1 is found to increase for compositions from x = 0.1 to x = 0.3 which can be attributed to stronger A-B interaction. Similar results are seen even in variation of saturation magnetization.

b) Compositional Variation of Resistivity :

The resistivity values at 300^0C in $Ni_{0.7-x}\ Mg_x\ Zn_{0.3}\ Fe_2O_4$ where (x = 0.1, 0.2, 0.3, 0.4 and 0.5) are given in table 3.A.2.

In the present case it is observed that on increasing the substitution of Mg the resistivity increases upto x = 0.3, with the further increase in Mg for x = 0.4 and x = 0.5 a decrease in resistivity is observed. The decrease in the Ni^{2+} ions reduces the formation of Ni^{3+} ions necessary for easy conduction. At elevated firing temperature it is known that a partial reduction of the Fe^{3+} to Fe^{2+} can take place. The formation of very small amount of Fe^{2+} ions may also be expected owing to evaporation of Zn^{2+} ions during sintering process [37]. Koshkin et al. have studied the dependence of electrical conductivity on composition. They have shown that as the Zn content is increased from $Ni_{0.9}Zn_{0.1}Fe_2O_4$ to $Ni_{0.7}Zn_{0.3}Fe_2O_4$ the electrical conductivity decreases whereas on further addition of Zn the conduction increases. The conductivity is found to be minimum for $Ni_{0.7}$ $Zn_{0.3}$ Fe_2O_4. Similar results have been observed in the present case for composition $N_{0.4}Zn_{0.3}Mg_{0.3}Fe_2O_4$ [38].

Such variations in resistivity have also be reported by Patil [39] while studying NiMgZnCu ferrites.

Table 3.A.1

Activation Energy and Curie Temperature Data for $Ni_{0.7-x}Mg_xZn_{0.3}Fe_2O_4$

X	Tc^0C	ΔE_{para}	ΔE_{ferri}
0.1	445	0.230	0.0561
0.2	451.7	0.1497	0.0373
0.3	467	0.1822	0.0561
0.4	-	-	-
0.5	-	-	-

Table 3.A.2

D.C. at Resistivity at 300^0C

X	Resistivity Ω cm
0.1	2.802×10^5
0.2	2.818×10^5
0.3	15.849×10^5
0.4	5.754×10^5
0.5	13.804×10^5

PART B - DIELECTRIC PROPERTIES

INTRODUCTION

There occurs dielectric displacement when alternating electric field is applied on ferrite material.

Depending on the frequency range i.e. from audio to optical, the polarisation can be distinguished as electronic, ionic, interfacial and orientational. In optical and ultraviolet frequency, region it is electronic. This polarization arises in atoms of any substance, including dielectrics regardless of whether or not other types of polarisation affect the substance or not.

The electronic polarisation sets in over a very short interval of time (10^{-14} to 10^{-15} s) which is comparable to light oscillation period. Hence this polarisation shows up in a wide frequency range upto optical bond. The ionic polarisation is sensitive below infra-red frequencies which arise due to the movement of cations and anions within the crystal. Orientational polarisation is the characteristic of polar dielectrics. It arises due to the orientation of electric dipoles in the field directions. Strictly speaking the field does not directly orient (rotate) polar molecules, but affects a certain orderliness in the positions of these molecules which execute permanent thermal motion in random directions. It follows that this polarisation is inherently associated with thermal motion of molecules and is rather dependent on temperature.

This polarisation makes its presence felt within a frequency band of 10^6 to 10^{10} Hz. Below microwave frequency the polarisation is due to the microstructure of polycrystalline materials and arises from the migration of free charge carriers. Migrational polarisation or interfacial polarisation or space charge polarisation exists in heterogeneous materials containing semiconducting impurities where the charges migrate within the impurity regions and store at interfaces or are trapped at grain boundaries. There appears field distortion due to the built up space charges and this shows an increase in permitivity. This effect is known as interfacial polarisation. The process during which the migrational polarisation sets in or decays can last for seconds, minutes and even hours. This explains why this polarisation commonly occurs at very low frequencies.

3.B.1 Dielectric Constant (relative permittivity) as a Function of Frequency :

The permittivity – frequency relationship describes the dispersion characteristic of a dielectric. A monotonic decrease in permittivity with increase in frequency is known as relaxation dispersion typical for dipole and migrational/ interfacial polarisation. Ionic and electronic types of polarization experience what is called resonance dispersion where the permittivity first grows, then decreases, traverses the minimum and reaches a certain constant value at very high frequencies [40].

The dispersion was explained by Koops [41]. Koops has given a general model for inhomogeneous dielectric which comprises of well conducting grains that are separated by a low conducting grain boundary layers. These layers constitute a condenser in which ferrite grains and their boundaries have different properties leading to two parallel resistance and capacitance circuit. One for grain and the other for grain boundaries which in turn are connected in series. Besides this the polycrystalline sintered ceramic material consists of cracks, pores and other defects and due to non homogeneity there are regions of different permittivity. Thus the conducting grains and less conducting boundaries are separated by voids or pores. This gives rise to conducting, less conducting and non-conducting matrix and there appears an apparent dielectric relaxation as a result of interfacial polarisation. This was explained by Maxwell and Wagner.

The grain boundaries are effective of low frequencies while the grains are effective at higher frequencies [41].

3.B.2 Polarisation and Dielectric Constant :

The dielectric displacement (D) found in a dielectric material when subjected to an alternating fields (E) is given by

$$D = \in^* F \qquad \ldots \qquad (3.8)$$

$\in^*$ - dielectric const. and is a complex quantity.

$$\in^* = \in' - j\in'' \qquad \ldots \qquad (3.9)$$

For an alternating electric field the displacement D and the electric field E are not in phase. Hence the dielectric constant is a complex quantity involving real (ε') and imaginary (ε'') parts which are related by a loss factor ($\tan\delta$) as

$$\tan\delta = \in'' / \in' \qquad \ldots \quad (3.10)$$

Therefore the power losses per unit volume of the material is given by

$$P = WE^2 \in o \in' \tan\delta \qquad \ldots \quad (3.11)$$

Where symbols have the usual meaning.

The frequency and time dependence of complex dielectric const (assuming Koops two layer model) can be given as

$$\in^* = \left(\in_\infty + \frac{(\in_o - \in_\infty)}{(1 + \omega^2 T^2)} \right) + i \left(\frac{(\in_o - \in_\infty)}{(1 + \omega^2 T^2)} \right) \omega T \quad (3.12)$$

where $\in_o$ and $\in_\infty$ are low and high frequency dielectric constants respectively, the relaxation time and w – the angular frequency.

From 3.9 and 3.10 we have

Tan δ = loss current/ charging current

$$= \epsilon'' / \epsilon'$$

$$= \frac{(\epsilon_o - \epsilon_\infty)\ \omega T}{(\epsilon_o - \epsilon_\infty\ \omega^2 T^2)} \quad \ldots \quad (3.13)$$

3.B.7 Experimental Techniques :

The parameter such as capacitance (C) and dissipation factor D were measured by two probe method in the frequency range 100 Hz to 1 MHz using LCR meter.

(HP make 4284 A model)

The real dielectric constant was calculated using the formula [11].

$$C' = (d / \epsilon_o A) \quad \ldots \quad (3.14)$$

C = capacitance

d = thickness of the pellet

A = area of the surface of the pellet

ϵ_o = permittivity of air or free space

= 8.854×10^{-12} F/ m

AC - conductivity is frequency and temperature dependent and is related to the dielectric relaxation caused by localised electric charge carrier. The ac conductivity data was derived from dielectric constant and loss tangent measured with the relation [12].

$$\sigma_{ac} = \in \in_0 w \tan \delta \qquad \ldots \quad (3.15)$$

The frequency response of these parameter. ($\in'$, $\in''$, σ_{ac}) are generally known as relaxation spectra or dispersion curves which characterise the materials.

3.B.4 Results and Discussions :

a) Variation of Dielectric Constant and loss tangent with frequency :

The variation of dielectric constant with frequency is as shown in the Figure 3.B.1.

The dielectric constant decreases with increase in frequency showing dispersion in a certain frequency range and thereafter beyond a certain frequency reaches a constant value as observed in all the compositions. At low frequencies $\in'$ falls rapidly.

All the samples reveal dispersion due to Maxwell-Wagner type interfacial polarization in agreement with Koop's phenomenological theory [41]. The higher values of dielectric constant observed at low frequencies are explained on the basis of space charge polarisation due to inhomogeneous dielectric structure and resistivity of the samples. The inhomogenities in the present system are impurity, porosity and grain structure.

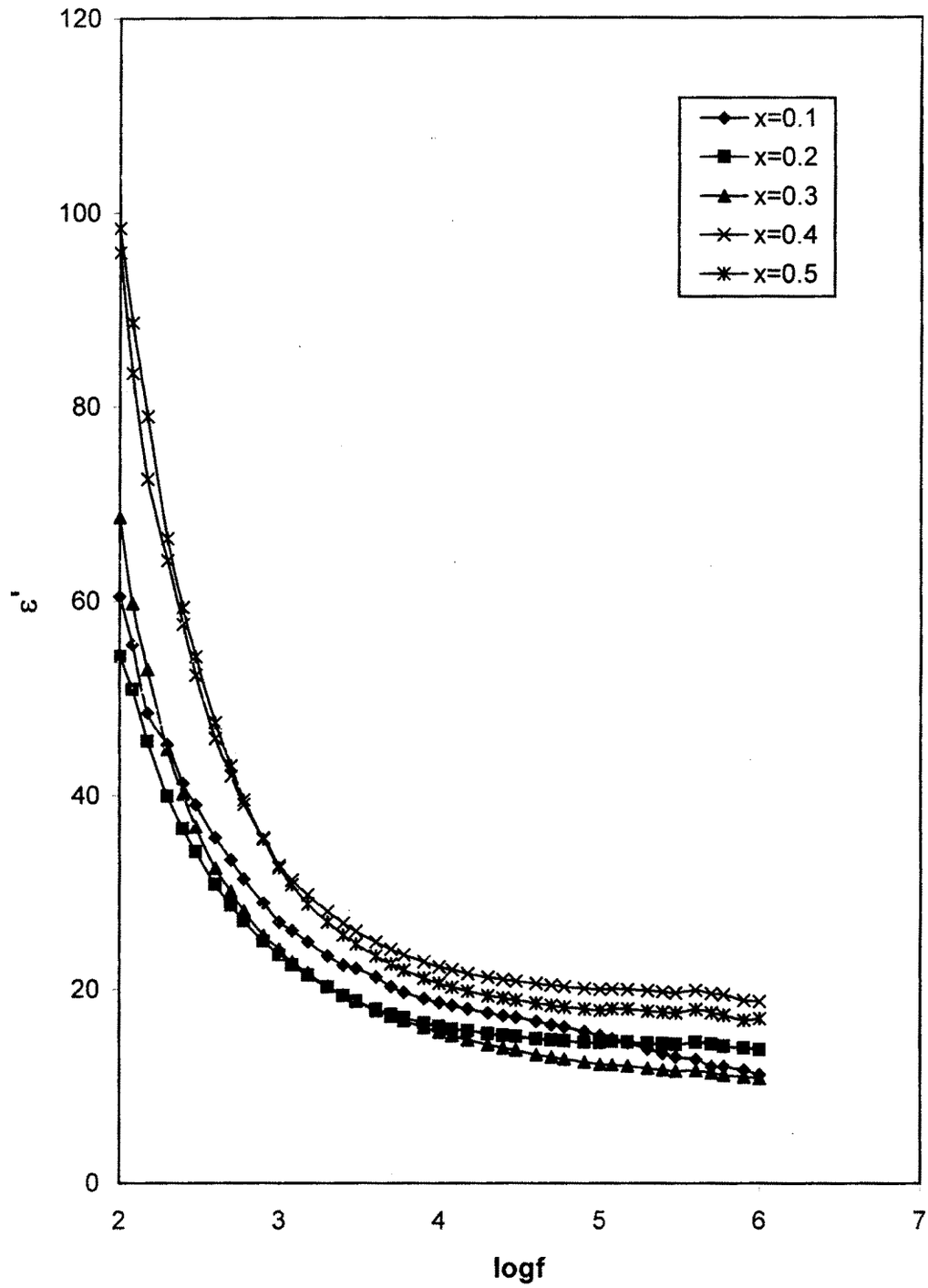

Fig.3.B.1 Variation of dielectric constant with frequency for $Ni_{0.7-x}Mg_xZn_{0.3}Fe_2O_4$

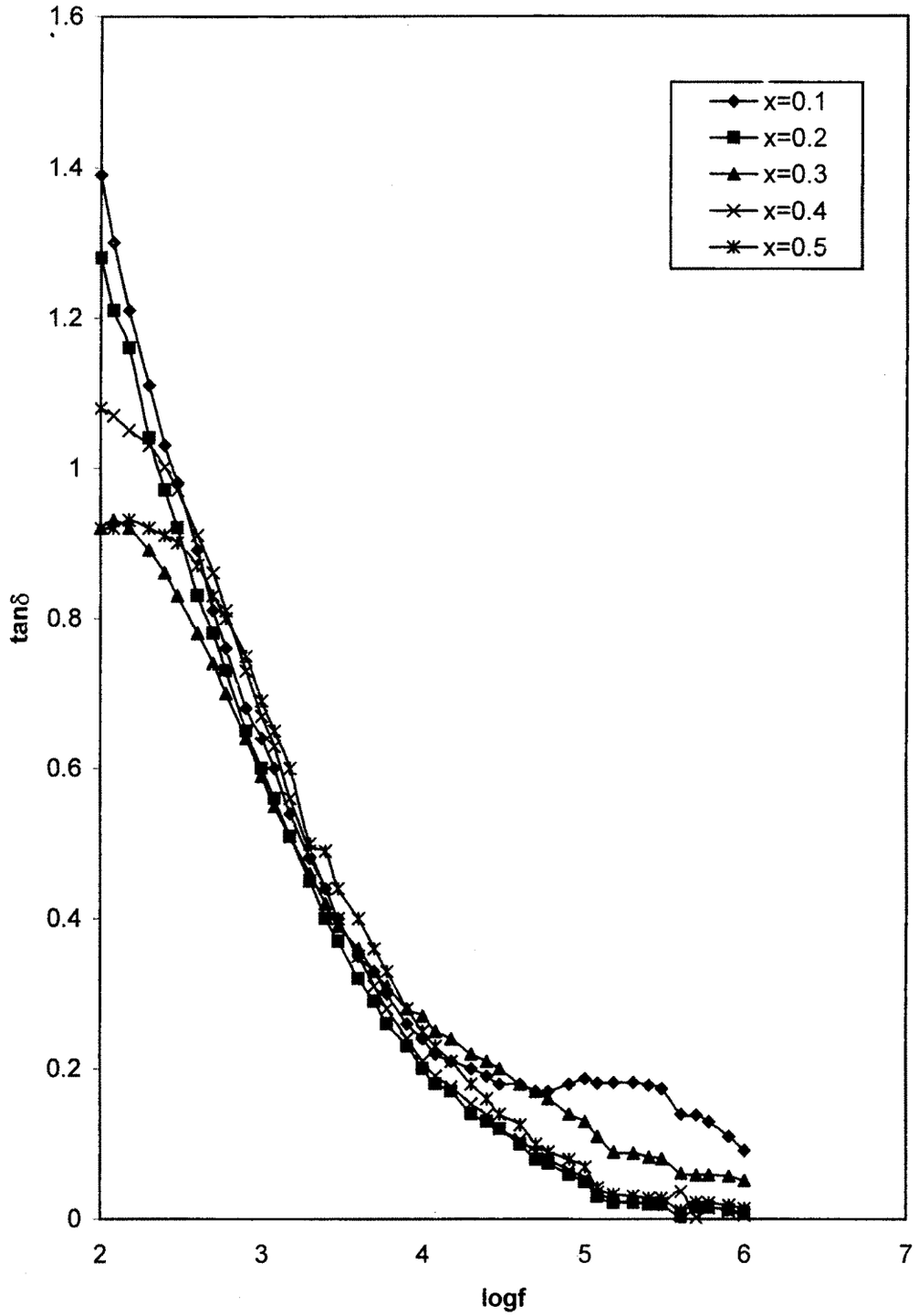

Fig.3.B.2 Variation of loss tangent with frequency for $Ni_{0.7-x}Mg_xZn_{0.3}Fe_2O_4$

Many workers [42, 43] have studied the variation of dielectric constant with frequency. They have explained that the mechanism of dielectric polarisation is similar to that of conduction. They have concluded that the electron exchange interaction $Fe^{2+} \rightarrow Fe^{3+}$ and $Ni^{2+} \rightarrow Ni^{3+}$ in ferrites results in local displacement of electrons in the direction of electric field which determines the polarisation in ferrites. In normal dielectric behaviour $\in'$ decreases with frequency and reaches a constant value beyond a certain frequency which indicates that beyond that frequency the electron exchange does not follow the alternating field.

The variation of tan δ for all the compositions show a dispersion with frequency and the variations are similar to dielectric versus frequency (Fig. 3.B.2).

b) Variation of A.C. resistivity (ρ_{ac}) with frequency :

The variation of ρ_{ac} with frequency is shown in Figure 3.B.3. The measurements of a.c. resistivity are carried out by Guyot et al. [44] on Ni ferrites, sintered at different temperatures. The variations of resistivity with frequency in the present systems shows dispersion upto 100k and then remains almost constant as shown in Figure Guyot [45] has obtained the intrinsic conductivity data from the analysis of frequency dependence on conductivity. Similar data are obtained by Ramnarayan [46] on V205 substituted Ni-Zn ferrites. The contribution

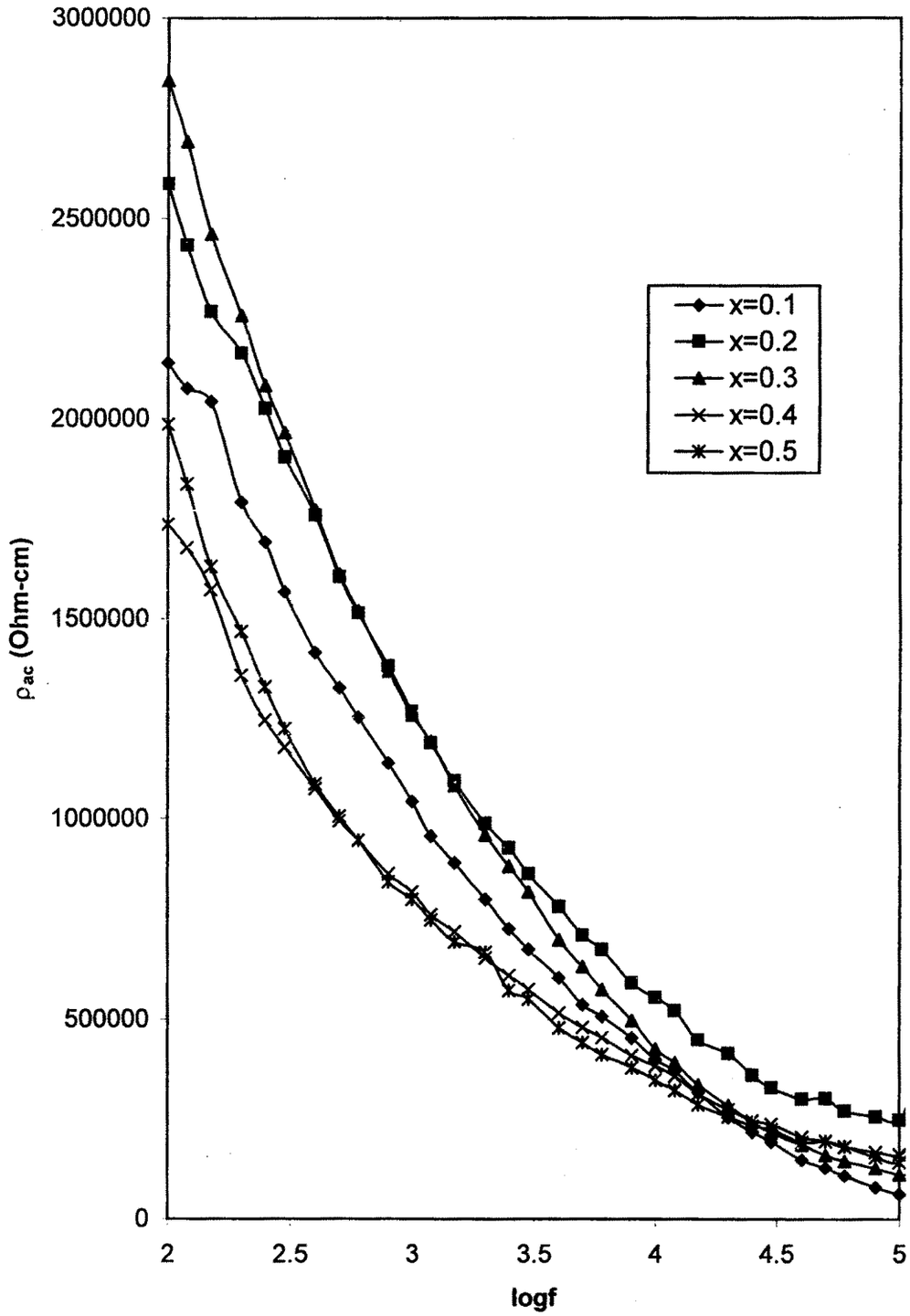

Fig.3.B.3 Variation ofAC resistivity with frequency for $Ni_{0.7-x}Mg_xZn_{0.3}Fe_2O_4$.

to d.c. resistivity comes from grain resistivity. The resistivity at lower frequency ($f = 0$) is considered as grain boundary resistivity and at high frequency ($f = \infty$) is considered as grain resistivity. From the Figure the resistivity at 1 MHz can be considered as high frequency resistivity which can be defined as grain resistivity and therefore it can be concluded that the main contribution to the a.c. resistivity comes from the grain boundary resistivity.

REFERENCES

1. Heiks, R. R. And Johnson, W. D.
J. Chem. Phys. 26 (1957) 582.

2. Verwey, E.J.W. and de Boer, J. H.
Rec. Trav. Chim. Phys. Bas. 55 (1936) 531.

3. Smit, J. and Wijn, H.P.J.

Ferrites, N. V. Philips Gloeilampen fabrieken, Eindhoven, Tl
Netherlands, 235 (1959).

4. Gillaud, C. and Bertrand, R.
J. Des. Rese. Cont. Nat. Res. Scientific 3 (1950) 73.

5. Bradbun, T. E. and Rigby, G. R.
Trans. Brit. Ceram. Soc. 52 (1953) 417.

6. Van Uitert, L. G.
Proc. IRE, 44 (1956) 1294.

7. Nikolskii, A. P.
Sov. Phys. Solid State 8 (1966) 960.

8. Narasimhan, C. S. and Swamy, C. S.
Phys. Stat. Sol. (a), 59 (1980) 817.

9. Seshan, K., Sahashimohan, A. L., Chakrabarty, D. K. and Biswa
A. B.

Phys. Stat. Sol. (a), 68 (1981) 97.

10. Belov, K. P., Srirna, E. P. and Malikou, O. A.
Sov. Phys. Solid State, 4 (1963) 2072.

11. Belov, K. P., Popora, A. A. and Talalaeva, E. V.
Sov. Phys. Crystallography, 3, (1960) 738.

12. Rosenberg, M., Nicolau, P. and Bunget, I.
Phys. Stat. Sol. 4 (1964) k121.

13. Rosenberg, M., Nicolau, P. and Bunget, I.
Phys. Stat. Sol. 4 (1964) k125.

14. Guillaud, C. and Bertrand, R.
J. Des. Res. Conf. Mat. Res. Scientific 3 (1950) 73.

15. Van Uitert, L. G.
Proc. J.R.E. 44 (1956) 1294.

16. Van Uitert, L. G.
J. Chem. Phys. A) 24 (1956) 306, b) 23 (1956) 1883.

17. Subrahmanyam, K. N. and Sweden, S. A.
Phys. Stat. Solidi a) 61 (1980) 59.

18. Murthy, V.R.K. and Sobhandri, J.
Phys. Stat Solidi (a) 38 (1976) 647.

19. Patil, M. G. et al.
Bull. Mater. Sci. Vol. 17, 4(1994) 399-403.

20. Babbar, V. K. and Chandel, J. S.
Bull. Mater. Sci., Vol. 18, 8(1995) 997.

21. Varshney, V., Puri, R. K., Rao, K. H. and Mediratta, R. G.
Proc. 3rd Conf. Ferrites (Japan (1980) 207.

22. Chandal, J. S., Sud, S. P. and Baijal, J. s.
Proc. Solid State Phys. Symp. (India) (1988) 239.

23. Baijal, J. S., Kothari, D. and Phanjoubam, S.
Advances in Ferrites (ed.) Srivastava and Patni M. J., Oxford an IBH Pub. Co., New Delhi 1 (371).

24. Yamashita, J. and Kurasawa, T.
J. Phys. Chem. Solids, 5 (1958) 34.

25. Holstein, T.
Ann. Phys. (NY) 8 (1959) 343.

26. Austin, L. G. and Mott, N. F.
Adv. Phys. (1969) 18.

27. Apel, J.
Sol. Stat. Phys. 18 (1969) 41.

28. Guillot, B.
Mat. Res. Bull. 11 (1976) 848.

29. Jonkar, G. H.
Phys. Grav. 22 (1956) 707.

30. Irkhin, P. and Turov, E. A.
Fiz. Met. Metallred 4 (1957) 582.

31. Komer, A. P. and Klivshin, V. V.
Izv. Akad. Nauk, SSSR Ser. Fiz. 18 (1954) 56.

32. Sawant, S. R. and Patil, R. N.
Solid State Commun. 40 (1981) 391.

33. Chandra Prakash
J. Mater. Sci. Letters 6 (1987) 651.

34. Kakatkar, S. V.
Ph.D. Thesis, Shivaji University, Kolhapur (1994).

35. Rustamov, A. G., Samokhvalov, A. a. and Fakidor, I. C.
Sov. Phys. Solid State, 5 (1963) 751.

36. Murthy, V.R.K., Visvanathan, B.
Narosa Publishing House, New Delhi (1990), 38.

37. Koshkin, L. I., Makienko, N. F. and Kharlamov, A. P.
Sov. Phys. Solid State 19 (1977) 551.

38. Bhise B V
Ph.D. Thesis, Shivaji University, Kolhapur (1994).

39. Patil, S. B.
M.Phil. dissertation, Shivaji University, Kolhapur (2001).

40. Tareer, B. M., Korotkova, N. V., Petrov, V. M. and Preobrazhensky A. A.
Electrical and radio engineering materials, MIR Publishers, Moscov (1980).

41. Koops, C. G.
Phys. Rev. 83 (1951) 121.

42. Kamiyoski, K.
Sci. Rept. Inst. Tohoku Univ. A3 (1951) 716.

43. Rezlescu, N. and Rezlescu, E.
Phys. Stat. Solidi (A) 23 (1974) 575.

44. Guyot, M. T., Merceron, M., Raibaut
Proc. Int. Conf. on Ferrites, Sept.-Oct. (1980).

45. Guyot, M. J.
Magn. Magn. Mat., 15-18 (1980) 925.

46. Ramnarayan, R. B., Tripathi, B. K., Das and Jain, G. C.
J. Mat. Sci. Lett. 18 (1983) 1934-40.