Experimental details

Experimental details

3.1. Introduction

The thin film materials have attracted considerable interest due to their applications in electronics and optics [1-5]. The physical chemical and photo electro chemical properties of such materials chiefly depend upon method use [6-11] for the film preparation. The characteristic of thin film materials like thickness are different from the bulk materials. Therefore it is necessary to use the proper techniques for the deposition of semiconducting materials in the thin film form.

The chapter gives details of the chemical deposition system developed and used for deposition of thin films. The section 3.4 describes the procedure for deposition of CdS, PbS and $Cd_xPb_{1-x}S$ thin films. The section 3.5 gives detailed information concerning the various characterization techniques used such as XRD, thickness measurement, electrical conductivity, scanning electron microscopy and thermoelectric power measurement. The fabrication of PEC cells and their optical, electrical characterization are given in the section 3.57. The chapter contains the detail of experimental techniques, and various characterization techniques. As the photo electronic and other properties of thin films are highly structure sensitive, therefore it is essential to characters the before using as a semiconductor material in the photo electro chemical cell.

3.2. Chemical bath deposition assembly

There are number of techniques used for thin film formation as described in section 1.42. Among the various methods of film deposition chemical bath deposition (CBD) method appears most suitable for the integration in large scale fabrication process. The main advantages of the chemical bath deposition method are its low cost, no requirement of sophisticated instruments, low processing temperature and non-polluting properties. The chemical deposition technique involves the use of dilute solutions of compounds involved in the reaction [12-19]. This offers minimum toxicity and occupational hazards since the vapour phase of reactants are avoided. We have successfully used the chemical bath deposition method for deposition of CdHgSe, CdZnSe, CdPbSe thin films [20-23].

The controlled precipitation technique is relatively simple, inexpensive, and convenient method by which a variety of substrates can be coated [24-25]. A photograph (fig. 3.1) shows the deposition assembly. The experimental set up consists of an oil bath with constant temperature assembly; reaction vessel, specially designed substrate holder and a motor with regulator. The components are,

1. An oil bath,
2. A dust proof chamber,
3. Reaction container,
4. Constant temperature assembly,
5. Substrate holder and motor

1. Oil bath with constant temperature assembly

A leak proof oil container containing sufficient quantity of paraffin oil and well insulated electrical heater immersed in the paraffin oil was used to achieve desired decomposition temperature. In order to minimize the heat loss the outer part of to container was insulated with a glass wool. An electric heater immerged in the paraffin oil was used to heat the bath with accuracy of about 1^0C.

2. A dust proof chamber

For clean and decontaminates environment a dustproof chamber was designed and fabricated. The chamber is made from plywood sheeth having dimensions 2.5 x 0.9 x 0.15 m. The hollow pipe outlet at the top of the chamber is fitted, in side the chamber with assembly to remove the gases evolved during deposition process.

3. Reaction container

A Borosil make glass beaker of 250 ml capacity in which appropriate quantities of the solutions were taken together. The beaker was immersed in oil bath with the help of a suitable stand.

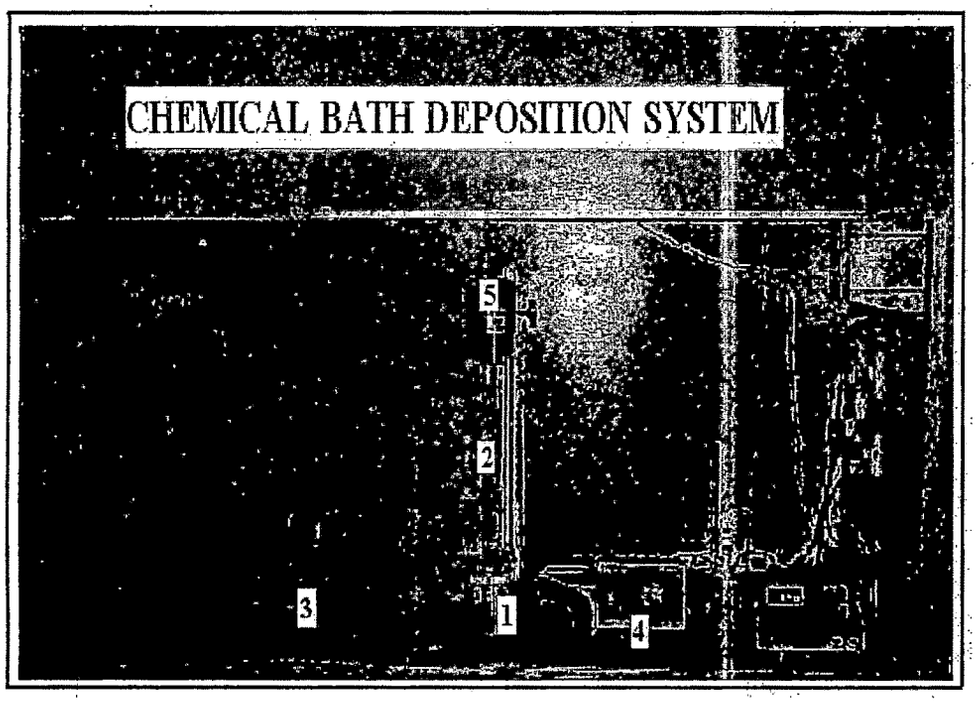

Fig.3.1: Schematic diagram of chemical bath deposition system for thin film formation

1. **Reaction container**
2. **Substrate holder**
3. **Temperature controlling assembly with sensor indicator**
4. **Speed controller**
5. **Rotating motor**

4. Constant temperature assembly

The constant temperature assembly was used for maintaining appropriate temperature of reaction bath. We can maintain the temperature ranging from room temperature to 373 K.

5. Substrate holder and motor

A specially designed substrate holder was used for holding the substrate in horizontal position. Fig 3.2 shows cross sectional view of thin film substrate

holder. The stainless steel and glass plates or any other substrates were mounted on the substrate holder and agitated with specific speed in reaction mixture. The substrate holder is made of Backelite Circular disc. The circular disc has four shots to fix substrates, with the help of screw in such a way that each of the substrate was exactly 90^0 to the next. This substrate holder was fitted to constant speed motor so that the substrate can be rotated in the reaction mixture. The motor was kept mounted on the drilling machine stand. The stand was modified in such a way that height of the motor can be property adjusted. The continuous and proper charming of solution in the reaction bath was made possible which results in uniform deposition of film. The thickness of substrate holder is 1cm and the diameter is less than the diameter of the beaker, which results in easy movement of substrates in the beaker.

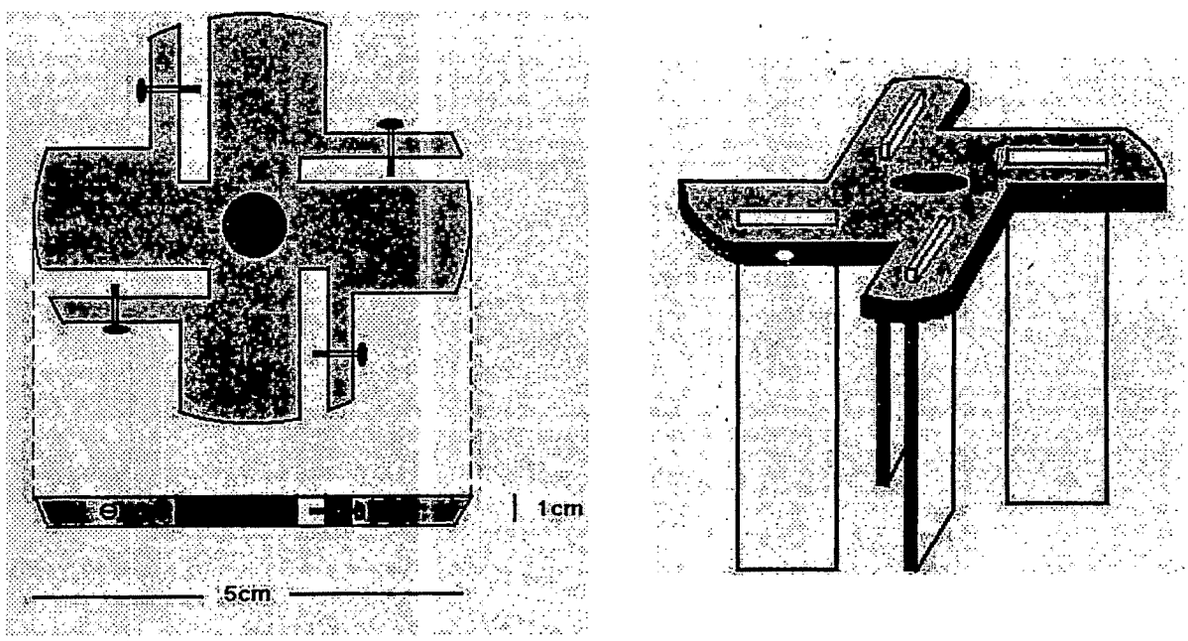

Fig.3.2: Cross-section view of thin film substrate holder

3.3 Preparation of thin films

3.3.1 Preparation of Substrate

Varieties of substrates like metal plates, semiconductors, insulators can be used. In our experimentation, the substrates used for depositing film were transparent non-conducting micro glass slides of approximate size 70 X 25 X 2 mm (Blue Star Co. Mumbai).

In addition to this, stainless steel substrates are also used. The film deposited on the non-conducting glass substrate was used for characterization study and material deposited on stainless steel substrate was used for electrochemical study.

3.3.2 Cleaning of substrate

The cleanliness of the substrate is most important feature in the method of thin film formation. Initially the glass slides were boiled in 1M chromic acid solution for about 45minutes. Then the slides were washed with double distilled water. Then they were further washed with detergent solution. Finally they were degreased with alcohol finally kept dipped in double distilled water.

The stainless steel substrate also requires the treatment of cleaning. The metal substrates were polished with emery and zero grade polishing paper. Then they were degreased with a detergent solution and then polishing using emery cloth.

3.3.3 Preparation of Solutions

The appropriate concentrations of this reactant required for thin film deposition were prepared by using AR grade chemicals and double distilled water.

1) Lead acetate, E-Merck (India) Ltd.

2) Cadmium sulphate E-Merck (India) Ltd.

3) Thiourea, E-Merck (India) Ltd.

4) Ethylene Diamine Tetra Acetic Acid, S.D. Fine Chem. Ltd. Bhoisar, Mumbai.

5) Potassium hydroxide flakes, Qualigens Fine Chemicals, Glaxo, India Ltd.

6) Ammonia, (25 v/v), S.D. Fine Chem. Ltd. Bhoisar, Mumbai.

3.4 Deposition of $Cd_x Pb_{1-x}S$ thin films

The $Cd_xPb_{1-x}S$ thin films were deposited from reaction solution containing cadmium sulphate, lead acetate and thiourea. The reaction mixture was prepared by sequential addition of cadmium sulphate, lead acetate, followed by addition of Na_2EDTA to form the complex.

In actual practice 5 ml of (0.1M) cadmium sulphate / lead acetate / mixture of both as per their composition parameter (x) was taken in a 250ml capacity beaker. To this 10ml Na_2EDTA was added in order to form stable complex. After getting clear solution, alkaline condition was maintained by addition of ammonia and potassium hydroxide. The total volume was made finally to 250 ml by adding double distilled water. The beaker was then transferred to an oil bath. Then the temperature of bath was allowed to increase slowly upto 343K. After 3 hours the substrates were removed washed several times with distilled water and kept in dessicator.

3.5 Thin film characterization techniques

Thin films were characterized by various techniques for characterization in order to ascertain whether the film with desired structure and composition in formed or not.

3.5.1 Thickness measurement

To characterize the films with respect to the structure, optical constants and transport behaviour, it is often necessary to measure its thickness. There are various methods that are used to determine the thickness of the film. Among various methods used, weight difference method is well known and often most convenient. The method is based on measurement of mass of the materials from known area of the film. The average layer thickness (t) is related to the mass (m) in grams, area (A) of the film in cm^2, density (d) in g/cm^3 by,

$$t = m/Ad \qquad (3.1)$$

The weight of films was measured by using microbalance with accuracy to ± 0.1mg. The density for CdS was 4.83 g/cm^3 and for PbS 7.5 g/cm^3. The density of $Cd_xPb_{1-x}S$ thin films were calculated by considering its compositional parameter 'x'.

3.5.2 Compositional analysis

For compositional analysis the atomic absorption spectroscopy was used (Parkin Elmer (USA) 3030).Previously weighed samples were dissolved in concentrated AR. Grade HNO_3. The instrument was calibrated to zero absorbance initially. Then the quantitative estimation of cadmium and lead

were carried out. The compositional analysis was carried out by standard calibration curve method.

3.5.3 XRD analysis

The X-ray diffract gram of 'as deposited' films were recorded using Philips-PW-1780^0 with CuK□ line (1.54056A^0). X-ray diffraction is the most important and extensively used technique to identify the crystallographic phases in the solid and to determine the crystal growth. The phenomenon of X-ray diffraction can be considered as reflection of X-ray from crystallographic planes of material.

The crystallite size of deposits is estimated from FWHM of most intense diffraction line by Scherrer's equation as,

$$D = 0.9\,\lambda / \beta \cos\theta \qquad (3.2)$$

Where D is the grain size, λ is the wavelength used, β the angular line width of half maximum intensity and θ is the Bragg's angle. The standard JCPDS data were used, for comparative purpose.

3.5.4 Optical absorption measurements

The optical absorption spectra were recorded in wavelength range of 400 nm to 1600 nm by using Hitachi-330 (Japan) Double Beam Spectrophotometer at room temperature. The optical absorption spectra were used to determine the optical band gap and type of optical transition involved.

3.5.5 Electrical Transport properties

3.5.5.1. Electrical conductivity measurements

The DC electrical conductivity measurements were carried out using two probe techniques set up designed and fabricated in our laboratory. Fig 3.3 shows the design and experimental setup for conductivity measurement.

A regulated DC power supply (Aplab make) was used to pass the current through the samples. The potential drop across the sample was measured by a Meco-Model 9A digital multimeter. A calibrated Chromel-Alumel thermocouple of 24 gauge size was used to measure temperature. The

conductivity was measured in temperature range 300-500K. Fig 3.4 gives circuit diagram for thermal conductivity measurement.

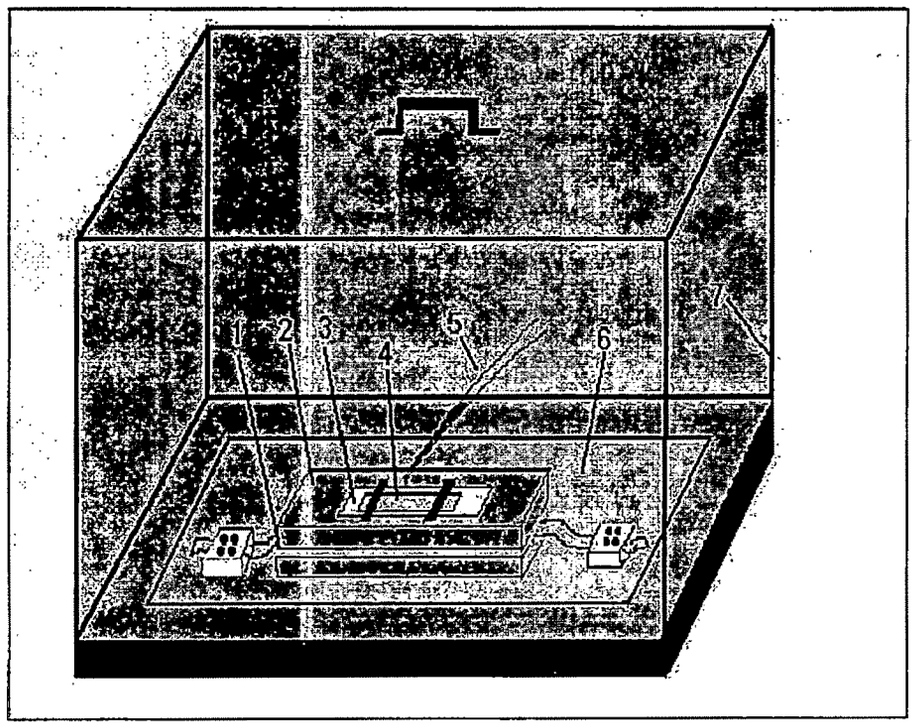

Fig.3.3: Design and Experimental setup for conductivity measurement

1: Electrical Heaters

2: Brass plates

3: Mica sheet

4: Thin film samples

5: Thermocouple

6: Asbestos Sheet

7: Shield

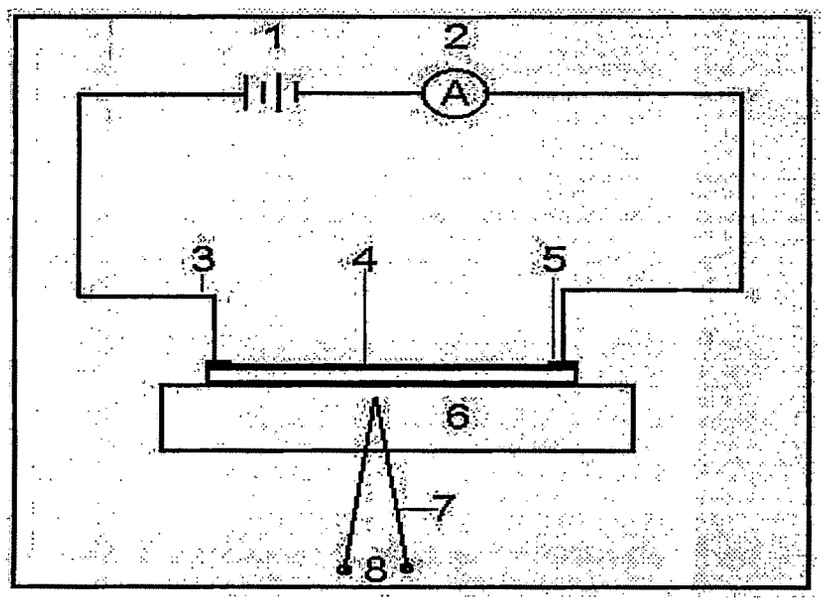

Fig.3.4: Circuit diagram for thermal conductivity measurement

1: 'dc' power supply

2: Ammeter

3: Ohmic contact grid

4: Thin film

5: Silver paste

6: Heated surface (Brass plate)

7: Thermocouple

8: To potentiometer

3.5.5.2. Thermoelectric power measurements

TEP is negative for n-type semiconductor and positive for p-type semiconductor. This fact is often used to determine the conduction type of a semiconductor. The TEP can also be used to determine the Fermi level relative to band edges. Fig 3.5 shows the design and experimental setup for TEP measurement.

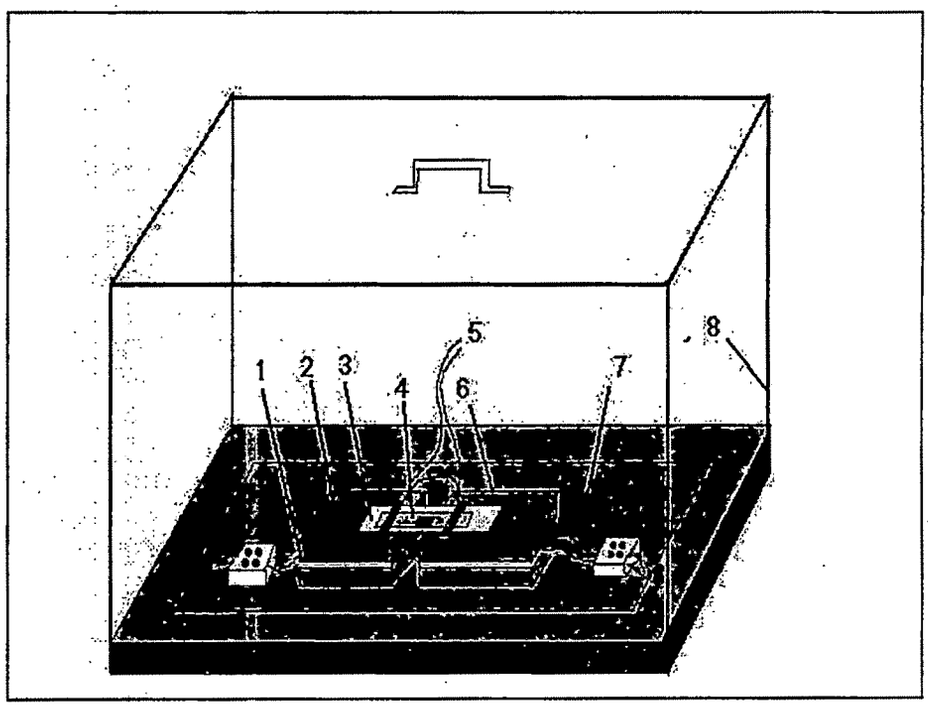

Fig.3.5: Design and Experimental setup for Thermoelectric Power measurement

1: Electrical Heaters

2, 6: Brass plates

3: Mica sheet

4: Thin film sample

5: Differential Thermocouple

7: Asbestos Sheet

8: Shield

3.5.6 Scanning electron microscopy

Scanning electron microscope was used for surface morphological characterization. The micrographs were obtained at 10,000magnification. From this the grain size was calculated for each sample of thin film.

3.6 Photoelectrochemical cell study

3.6.1 Design and fabrication of PEC cell

The schematic diagram of Photo electrochemical cell fabricated in our laboratory is shown in fig 3.6. It consists of two test tubes connected to each other by small glass tubing horizontally forming H shaped glass assembly. One of the glass test tubes was made from hard glass having diameter of size 2.7cm and length 7cm and other is ordinary test tube of inner diameter 1.5cm and length 7cm. The 'H' shaped glass container was fitted in a copper pot of suitable size. A window having dimension of 2cm x 1.5cm was made available for illumination of the photo electrode PEC cell having following configuration.

nCdPbS | NaOH(1M) + S(1M) + Na_2S(1M) | (graphite)

A graphite rod was sensitized in a medium containing Cos solution for 24 hours and then employed as a counter electrode. The distance between a photo electrode and a counter electrode was kept of the order of 0.3 cm. A rubber cork was used to air tighten the cell and support the counter electrode and photo electrode.

3.6.2 Electrical characterization of PEC cell

The electrical properties of PEC cell provides the information regarding the nature of the junction formed between photo electrode and electrolyte, and the (junction formed bet) charge transfer process across the electrode or electrode interface. The properties have been studied through the measurements of current voltage characteristics in the dark, under illumination.

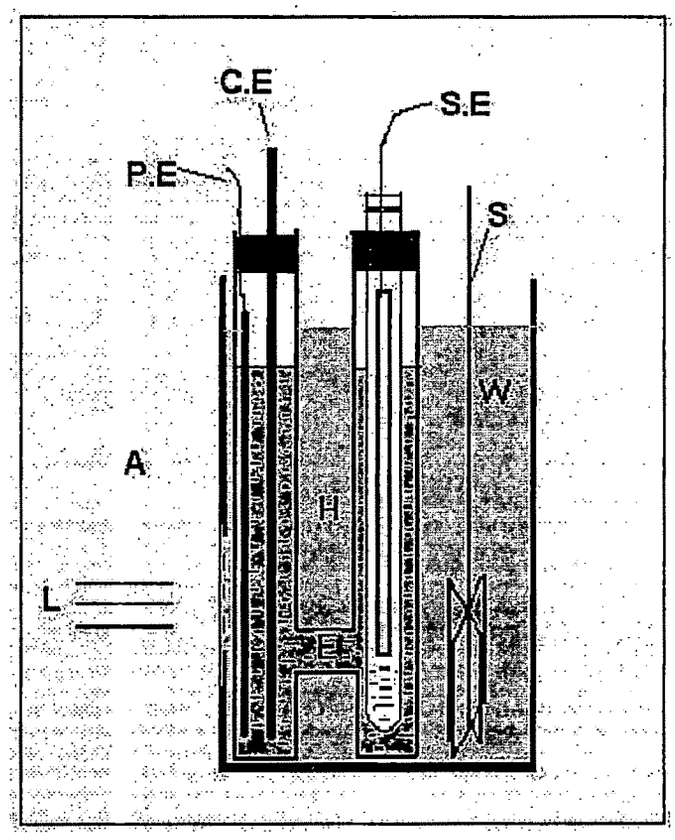

Fig.3.6: A schematic diagram of Photoelectrochemical cell

L: Light

A: Anode

P.E.: Photoelectrode

C.E.: Counter Electrode

S.E.: Standard Calomel Electrode

S: Stirrer

W: Water

H: 'H' shaped cell

E: Electrolyte

3.6.3 The current-voltage characteristics in dark

To measure the current voltage characteristics, conventional two electrode cell geometry was used. The helical potentiometer was used to vary the applied voltage to the junction and recorded with a digital voltammeter. Hewlett-Packard, 6.5 digit millimeter was used for measurement of current flowing through the junction. A schematic of the cell geometry along with circuitry used is shown in fig.3.7.A water filter was imposed between the cell and the lamp to avoid the heating of the cell. A 500 watt tungsten filament was employed for cell illumination.

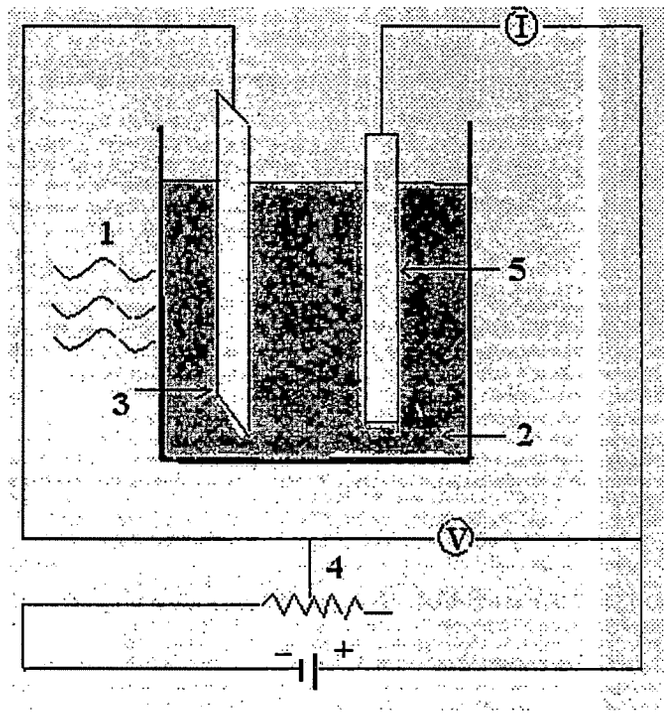

Fig. 3.7: Circuit Diagram for measuring Current-Voltage of various PEC cell

1: Light Energy

2: Electrolyte

3: Photoelectrode

4: Potentiometer

5: Counter electrode

3.6.4 The Capacitance-voltage characterization in dark

A schematic of electrical circuitry used is shown in fig.... This capacitance-voltage measurement in reverse based condition was carried out

using a three electrode configuration. The potential across the junction was varied by a helical, wire wound potentiometer and measured by an Aplab-make capacitance meter at superimposed frequency of 1 kHz.

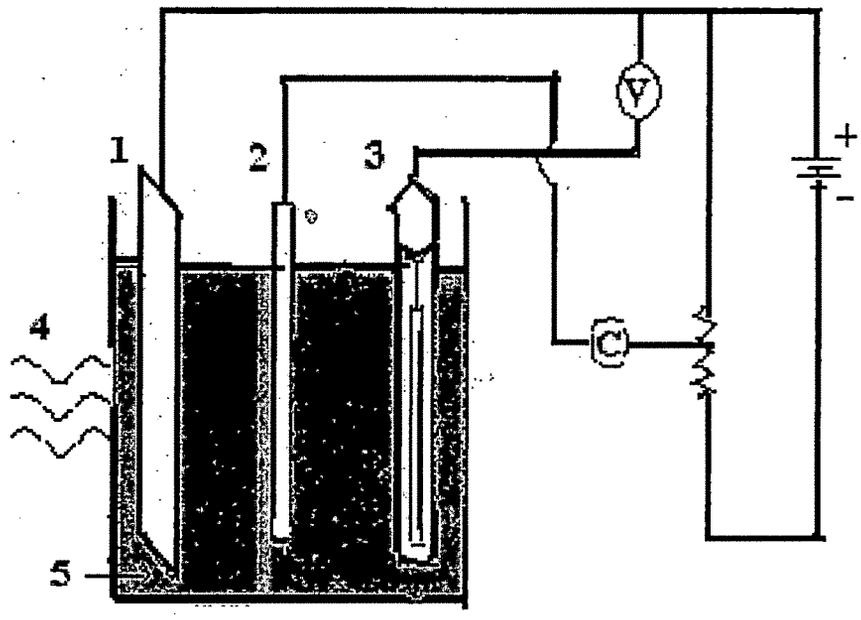

Fig.3.8: Circuit Diagram for measuring Capacitance-Voltage of various PEC cell

1: Photoelectrode 2: Counter electrode 3: SCE 4: Light energy

5: Electrolyte

3.6.5 The barrier height determination

Barrier height of cell was determined by nothing the temperature dependent reverse saturation current of PEC cell at different temperatures.

3.6.6 Power output curves

The power output curve has been obtained for given PEC cell at a constant illumination of 30 mV/cm^2. A tungsten filament lamp of 500 watt was used as light source to irradiate the cell. To avoid heating effect a water filter was imposed between lamp and cell. For measurement of illumination intensity Meco make digital Lux meter was used.

References:

1] A. Okazaki, A. Uyada, Journal of Phys. Soc. Japan, 11(1956)470.

2] A. K .Garg, A. K. Jain, O. P. Agnihotri, Indian J. Pure Appl. Phys. 21 (1983) 276.

3] S. A. Kuhaimi, Z. Tulbah, A. Marhad, F. Harbi, M. Moneef, Indian J. Pure Appl. Phys. 38 (2000) 127.

4] A. Osherov, M. Shandalov, V. Ezersky, Y. Golan, Journal of Crystal Growth, 304 Issue, 1(2007) 169.

5] S. Seghaier, N. Kamoun, R. Brini, A. B. Amara, Mater. Chem. Phys. Vol.97 Issue 1(2006)71.

6] D. J. Chadi, Annu. Rev. Mater. Sci. 24(1994) 45.

7] N. Bouad, L. Chapon, R. M. Marin-Ayral, F. Bourree-Vigneron,J. C. Tedenac, J. Solid State Chem. 173(2003) 189.

8] T. Kanniainen, S. Lindroos, J. Uhanus, M. Leskela, J. Mater. Chem. 6(1996) 983.

9] H. Zogg, C. Maissen, J. Masek, T. Hoshino, S. Blunier, A. N. Tiwari, Semicond. Sci. Technol. 6(1991) C36.

10] S. Gorer, A. Albu-Yaron., G. Hodes, Chem. Mater. 7 (1995) 1243.

11] V. Damodara Das, K. Seetharam Bhat, J. Mater. Sci. 1(1990)169.

12] G. Hodes, A. A Yaron, F. Decker, P. Motisuke, Phy. Rev. B34 (1987)346.

13] R. L. Morales, M. R. Fafan, /o. P. Moreno, J. P. Alvarez, R. H. Cabrera, C. A. Flores,O.Z.Angel, O. G. Mandujano, P. D. Angel, J.L.M. Montes, L. B. Lopez, J. Electrochem. Soc. 146 (1999) 2546.

14] Schmidt, Chem. Rev. 92(1992) 1709.

15] D. Avellandeda, G. Delgado, M. T. S. Nair, P. K. Nair, Thin Solid Films (2007).

16] A. Claudia, Bernardes-Silva, A. F. Mesquita, E. De Moura Neto, A. O. Porto, J. D. Ardisson, G.M. de Lima, F. S. Lameiras, Materials Research Bulletin, 40(2005)1497.

17] B.Pejova, I. Grozdanvo, Thin Solid Films (2007).

18] S. Chaudhari, A. Mondal, A. K. Pal J. Mater. Sci. Lett. 6 (1987) 366.

19] P.P. Hankare, A. D. Jadhav, V. M. Bhuse, K. M. Garadkar, A. S. Khomane, Mater. Chem. Phys. 80 (2003)102.

20] P. P. Hankare, V. M. Bhuse, K.M. Garadkar, Semicond.Sci.Technol.19 (2004) 1,

21] P.P. Hankare, S.D Delekar, P.A.Chate S. D. Sabane K.M. Garadkar, V.M. Bhuse, Semicond. Sci. Technol. 20(2005)257.

22] P. P. Hankare, P.A. Chate, M.R. Asabe, S. D. Delekar, K. M. Garadkar Journal of Materials Science: Materials in Electronics ,7(2006) 1055-1063.

23] Hankare P. P., V.M.Bhuse, K.M.Garadkar, S.D.Delekar I.S. Mulla, Semicond. Sci. Technol. 18(2003) 1.